RSGB Intermediate Licence Notes

Exam

Subject	Number of Questions	Page
Licensing conditions and station identification	6	3
Technical aspects	14	8
Transmitters and receivers	7	33
Feeders and antennas	4	57
Propagation	3	69
Electromagnetic compatibility	4	74
Good operating practices and procedures	2	87
Safety	3	91
Measurements and construction	3	96
Total	**46**	

The Intermediate level Pass Mark is 61% or 28 correct answers out of a total of 46 questions.

Levels of Understanding

The key words **Recall** and **Understand** are used to denote differing levels of comprehension.

Recall indicates the need to remember a fact and apply it fairly directly to a question or situation. A thorough understanding of why the fact is so and the full range of circumstances in which it is applicable is not required, but questions will expect a basic understanding of its meaning and implications.

Understand indicates the need for a more detailed knowledge of the subject, fully comprehending the reasons why the point is correct and the range of circumstances in which it is relevant and applicable. Typically, this will be where the candidates will find themselves having to make judgements or apply a practice to a wider range of circumstances

Formulae

Ohms law: Voltage = Current x Resistance ($V = IR$)

Power: Power = Voltage x Current ($P = VI$)

Resistors in Series: $R_T = R_1 + R_2 + R_3 \ldots$

Resistors in Parallel: $\frac{1}{R_T} = \frac{1}{R_1} + \frac{1}{R_2} + \frac{1}{R_3} \ldots$ or $R_T = \frac{R_1 \times R_2}{R_1 + R_2}$

Potential Divider: $V_{out} = V_{in} \frac{R_1}{R_1 + R_2}$

Capacitors in Series: $\frac{1}{C_T} = \frac{1}{C_1} + \frac{1}{C_2} + \frac{1}{C_3} \ldots$

Capacitors in Parallel: $C_T = C_1 + C_2 + C_3 \ldots$

Inductors in Series: $L_T = L_1 + L_2 + L_3 \ldots$

Inductors in Parallel: $\frac{1}{L_T} = \frac{1}{L_1} + \frac{1}{L_2} + \frac{1}{L_3} \ldots$ or $L_T = \frac{L_1 \times L_2}{L_1 + L_2}$

AC Root Mean Square: $V_{rms} = \frac{V_{peak}}{\sqrt{2}}$

AC Frequency: $Time\ for\ one\ cycle = \frac{1}{frequency}$ or $frequency = \frac{1}{Time\ for\ one\ cycle}$

Inductive Reactance: $X_L = 2\pi \times frequency \times Inductance = 2\pi f L$

Capacitive Reactance: $X_C = \frac{1}{2\pi \times frequency \times Capacitance} = \frac{1}{2\pi f C}$

Tuned Circuit: $Q = \frac{f_C}{f_U - f_L} = \frac{centre\ frequency}{bandwidth}$

Transformer: $V_S = V_P \times \frac{N_S}{N_P}$

Transformer: $I_S = I_P \times \frac{N_P}{N_S}$

Transistor : $I_C = \beta \times I_B$

Velocity of radio waves in free space: $v = 3 \times 10^8 = 300{,}000{,}000\ m/s$

Frequency & Wavelength: $v = f\lambda$

Antenna: $erp = power \times gain$ (linear)

Resistor Colour Codes

Black	0
Brown	1
Red	2
Orange	3
Yellow	4
Green	5
Blue	6
Violet	7
Grey	8
White	9
Silver	10%
Gold	5% or ÷10

Syllabus

Section 1 — Licensing conditions and station identification

Nature of amateur radio, types of licence and call signs

1A2 **Recall** the restrictions applicable to Intermediate licensees in operation from a ship or aircraft.

An Intermediate licensee may only operate from a UK-registered ship or aircraft and only within the territorial waters or airspace of the UK or the Crown Dependencies of Jersey, Guernsey and the Isle of Man. Territorial waters extend up to 12 nautical miles from the coast. The permission of the captain or person in charge must be obtained before transmitting, and any instructions given must be followed. When operating from an aircraft, the maximum permitted power is 500 mW EIRP and operation is only allowed in primary amateur bands.

Operators and supervision

1B1 **Understand** the meaning of direct supervision, duties of the supervisor and need for the operator to comply with the licence

Direct supervision means that the supervisor must be present and able to observe and control the operation at all times while the supervised person is transmitting. The supervised operator must use the supervisor's callsign and operate within the terms of the supervisor's licence. The supervisor is responsible for the station and for ensuring that all licence conditions are complied with. The licence conditions that apply are always those of the callsign being used, even if the supervised person holds a higher class of licence. A supervised operator may use all the privileges of the supervisor's licence, provided the supervisor's callsign is used.

Messages

1C1 **Recall** that in an international disaster messages may be passed, internationally, on behalf of non-licensed persons.

During a recognised international disaster, radio amateurs are permitted to pass international messages on behalf of non-licensed persons. In such circumstances, non-amateur stations involved in disaster relief may be authorised to operate in amateur bands. Amateur stations must give priority to emergency and disaster communications and must not cause harmful interference to such traffic.

1C2 **Recall** that the licensee may pass messages on behalf of a User Service and may permit them to use the Radio Equipment to send messages.

If requested by a member of a User Service (for example the British Red Cross, St John Ambulance, St Andrew's Ambulance Association, the Women's Royal Voluntary Service, the Salvation Army or any Government department), a radio amateur may transmit any information they provide unchanged, even if it is obscured for reasons of confidentiality. A licensee may permit a member of a User Service to operate and transmit using the licensee's radio equipment.

Apparatus, inspection and closedown

1D1 **Recall** that transmissions from the station must not cause undue interference to other radio users.

Recall that the Licensee must reduce any emissions causing interference, to the satisfaction of a person authorised by Ofcom.

Understand that this may include a reduction in transmit power or any other action required to reduce emissions to an acceptable level

The licensee must ensure that transmissions from the station do not cause undue interference to other radio users. If the station causes undue interference, it is the licensee's responsibility to correct it and reduce emissions to an acceptable level. Ofcom may require the licensee to modify the equipment or may restrict the use of the radio equipment, temporarily or permanently and with immediate effect, until the interference is reduced to the satisfaction of a person authorised by Ofcom. This may include reducing transmit power, modifying equipment, changing operating practices, or avoiding particular frequencies or bands entirely.

1D2 **Recall** the occasions for mandatory log keeping.

Understand circumstances in which modification or cessation of operating of the station may be required.

Understand circumstances in which modification of transmitting equipment may be required.

If requested by Ofcom, the licensee must keep a log of transmissions and must record the information specified by Ofcom. Ofcom may require the licensee to modify the station or transmitting equipment, or may restrict or prohibit operation, temporarily or permanently and with immediate effect, if licence conditions are breached or if the station causes undue interference. In the interests of public safety, national safety or national security, the licensee may also be required to modify operating practices or to cease operating entirely.

Unattended and remote control operation

1E1 **Recall** that the licensee may use any communication link for the purposes of Remote Control of their station and must ensure that:

- any links used for the Remote Control of the Radio Equipment must be adequately secure so as to ensure that no other person is able to control the Radio Equipment;
- Remote Control links using Amateur Radio frequencies must use frequency bands above 30 MHz and must not be encrypted;
- transmissions from the Radio Equipment can be terminated promptly; and
- the Licence Number must be displayed on or next to any unattended Radio Equipment located other than at the address shown in the licence.

The remote-controlled station may only be operated by the licensee or by a person under the direct supervision of the licensee. The transmitter must have a failsafe whereby if the link fails it does not transmit. The link must be secure so that it cannot be accessed by others, however it must not be encrypted if using amateur RF. Any communication method may be used to control the remote equipment but if RF is used it must be above 30MHz and in an amateur band. A transmission from a remote station must be able to be terminated immediately. When the equipment is located at a place different from the address shown on their license, the licensee of the equipment must display their licence number on or next to the equipment.

Electromagnetic Fields

1G1 **Recall**

- the average and peak transmit power level at which the EMF restrictions apply;
- when there is a need to reassess EMF compliance.

EMF restrictions apply when either the average transmit power over any 6-minute period exceeds 10 W EIRP, or when the peak transmit power exceeds 100 W EIRP. All license holders must undertake an EMF assessment of their station to ensure compliance with the exposure limits and take any measures necessary to ensure compliance. Reassessment is required whenever a change is made that could lead to a change that may affect the station's EMF exposure characteristics. This includes, but is not limited to, lower loss feeder cable to an antenna, a change in antenna, different transmit modes being used.

Licence Schedule

1H1 Identify relevant information in Schedule 1 to the Intermediate licence.

A copy of the relevant part of Schedule 1 will be available during the examination.

Table B is the only part of the schedule that contains the information specifically pertaining to Intermediate licence holders. Otherwise the entire schedule is relevant to the licence holder. The maximum permitted transmitter power for Intermediate licensees is generally 100 W PEP, with lower limits of 32 W PEP on the 160 m band and 40 W PEP on the 70 cm band. When operating from an aircraft, Intermediate licensees are limited to 500 mW EIRP, and only in frequency bands where the amateur service has a primary allocation.

Section 2 — Technical aspects

Fundamental theory

2A1 **Recall** that components have tolerances, and that the measured value of a component may not precisely agree with its marked value.

Electronic components are manufactured with tolerances, meaning their actual measured value may not exactly match the marked or nominal value. The tolerance defines the range within which the true value of the component is expected to fall. For example, a 75kΩ resistor with a tolerance of 5% may have a value anywhere between 71.25kΩ and 78.75kΩ. In general, components with tighter tolerances are more expensive to manufacture and therefore cost more.

Resistance

2C1 **Understand** circuits comprising series and parallel connections of resistors and cells.

Calculate the value of any one of the three quantities (V, I or R) given the other two.

Calculate the combined resistance of two or three resistors in series and/or parallel.

Resistors of different values may be used in series or parallel or combined series parallel circuits.

The prefixes milli and kilo may be involved for some of these calculations.

Resistors of different values may be connected in series, parallel, or series-parallel combinations.

When resistors are connected in series, the total resistance is equal to the sum of the individual resistances. When cells are connected in series, their voltages add together to give the total supply voltage. Multiple cells connected together form a battery.

When resistors are connected in parallel, the total resistance is found by taking the reciprocal of the sum of the reciprocals of the individual resistances. For two resistors in parallel, the total resistance can also be calculated by dividing the product of the resistor values by their sum. If several resistors of equal value are connected in parallel, the total resistance is equal to the value of one resistor divided by the number of resistors. In a parallel resistor network, the total resistance will always be lower than the smallest value of resistor.

Cells connected in parallel provide the same voltage as a single cell, provided all cells have the same voltage rating.

If any two of voltage, current, or resistance are known, the third can be calculated using Ohm's Law, expressed as V = I × R or its rearranged forms.

2C2 **Understand** that two or three resistors can be arranged to act as a potential divider and apply the formula.

The prefixes milli and kilo may be involved for some of these calculations.

When two or more resistors are connected in series across a voltage source, the same current flows through each resistor and a voltage drop appears across each one. This arrangement can be used as a potential divider to obtain intermediate voltages.

In a potential divider made from three or more resistors, the output voltage between any two points in the chain is equal to the sum of the voltage drops across the resistors between those two points. Each voltage drop can be found using Ohm's Law, since the current is the same through all the resistors.

The current in the divider can be calculated by dividing the input voltage by the total resistance. The voltage across each resistor is then found by multiplying the current by the resistor value.

For the special case of a two-resistor potential divider, the output voltage taken from the junction of the resistors relative to ground is given by:

$V_{out} = V_{in} \times R2 / (R1 + R2)$

where R2 is the resistor connected to ground and R1 is the resistor connected to the input voltage.

2C3 **Understand** the difference between potential difference (PD) and electromotive force (EMF).

Understand the concept of source resistance (impedance) and voltage drop due to current flow.

Electromotive force (EMF) is the potential difference produced by a voltage source when no load is connected and no current is flowing.

When a load is connected, current flows and the voltage source's internal resistance or source impedance appears in series with the load. In DC circuits this is mainly resistive, while in AC circuits it may also include reactive components and is therefore described as an impedance.

The current flowing through the internal resistance or impedance causes a voltage drop within the source, so the potential difference available at the load is less than the EMF.

Reactive Components

2D1 **Recall** that a capacitor normally consists of two metal plates separated by an insulating material and that its capacitance is measured in Farads.

Understand that a capacitor can store an electric charge, and that its ability to store a charge (capacitance) depends upon the area of the plates, their separation and the nature of the material between the plates (the dielectric).

A capacitor is an electronic component constructed from two metal plates separated by an insulating material. This insulating material is known as the dielectric and may be made from materials such as air, paper, chemicals, or certain ceramics.

A capacitor can store electric charge, and its ability to do so is known as capacitance. The value of the capacitance depends on the area of the plates, the distance between them, and the nature of the dielectric material.

Capacitance is measured in farads, although most practical capacitors have values in the microfarad, nanofarad, or picofarad ranges.

2D2 **Understand** and apply the formulae for calculating the combined values of two or three capacitors in series and in parallel.

Where a capacitor network is arranged in parallel the total capacitance is equal to the sum of the individual capacitor values. In series the total capacitance is found by calculating the reciprocal of the sum of the reciprocals of each individual capacitor. This can be remembered as being the opposite of the rules for resistors. The maximum voltage rating in both cases is the maximum voltage of the capacitor with the lowest maximum voltage. The total capacitance of n capacitors of equal value in series is equal to the value of one capacitor divided by n. The total capacitance of two capacitors in series can also be found by the product of the two values divided by the sum. The total capacitance in a series network will always be less than the value of the smallest capacitor.

2D3 **Recall** that some capacitors e.g. electrolytic are polarised and must be correctly connected to avoid injury, damage or destruction.

Some capacitors, such as electrolytic capacitors, are polarised and have a positive and a negative terminal. These capacitors must be connected with the correct polarity so that the positive terminal is always at a higher potential than the negative terminal.

If a polarised capacitor is connected with reversed polarity, it may overheat, leak, or rupture, which can cause damage to equipment and may present a risk of injury.

Polarised capacitors are not suitable for use with AC signals unless a DC bias is present, because they must not be subjected to reverse voltage.

2D4 **Understand** the relative movement of a conductor in a magnetic field will induce a voltage across the ends of the conductor.

Recall that a current passing through a wire forms a magnetic field around the wire.

Recall that an inductor is normally a coil formed of a number of turns of wire to concentrate the magnetic field and that inductance is measured in Henries.

Recall that an inductor is able to store energy in its magnetic field.

Recall that the ability to store energy is known as inductance, which depends upon the number of turns of wire on the coil and its dimensions.

When an electric current flows through a conductor, a magnetic field is formed around the wire. The magnetic field surrounds the conductor and is at right angles to the direction of current flow.

If a conductor moves relative to a magnetic field, or if the magnetic field around a conductor changes, a voltage is induced across the ends of the conductor.

An inductor is an electronic component formed from a number of turns of wire wound into a coil. Coiling the wire concentrates and strengthens the magnetic field produced when current flows.

An inductor stores energy in its magnetic field. The ability of an inductor to store this energy is known as inductance and depends on the number of turns of wire and the physical dimensions of the coil. Inductance is measured in henries.

2D5 **Understand** and apply the formulae for calculating the combined values of two or three inductors in series and in parallel.

When inductors are connected in series, the total inductance is equal to the sum of the individual inductances.

When inductors are connected in parallel, the total inductance is found by taking the reciprocal of the sum of the reciprocals of the individual inductances. The total inductance of a parallel network is always less than the value of the smallest inductor.

For two inductors in parallel, the total inductance can also be calculated by dividing the product of the two inductance values by their sum. If several inductors of equal value are connected in parallel, the total inductance is equal to the value of one inductor divided by the number of inductors.

Inductance is measured in Henries.

2D6 **Recall** that the inductance of a coil increases with increasing number of turns, increasing coil diameter and decreasing spacing between turns.

Understand the use of high permeability cores and slug tuning.

The inductance of a coil depends on its physical construction. Increasing the number of turns, increasing the diameter of the coil, or decreasing the spacing between the turns will all increase the inductance.

Inductance can also be increased by inserting a core made from a high permeability material into the centre of the coil. Permeability is a measure of how easily a material allows magnetic flux to pass through it. Materials with high permeability, such as ferrite or iron, allow magnetic field lines to concentrate more effectively than air, which increases the strength of the magnetic field for a given current and therefore increases the inductance.

If the core is adjustable and can be moved in and out of the coil, the inductance can be varied. This method of adjusting inductance is known as slug tuning and is commonly used for tuning circuits.

AC theory

2E1 **Understand** that by repeatedly charging and discharging in alternate directions, a capacitor can pass alternating currents but cannot pass a direct current.

When a DC voltage is applied to a capacitor, current initially flows as the plates charge. As charge builds up, the voltage across the capacitor increases and increasingly opposes the applied voltage, causing the current to fall. When the capacitor voltage equals the supply voltage, there is no remaining voltage to drive current, so DC current stops.

With an alternating voltage, the polarity continually changes, so the capacitor is repeatedly charged and discharged. This prevents a steady opposing voltage from forming and allows AC current to flow.

2E2 **Understand** the sinusoidal curve as a graphical representation of the rise and fall of an alternating current or voltage over time and that both the frequency and the amplitude must be specified.

Recognise the graphical representation of a square wave.

Recall that the time in seconds for one cycle is the Periodic Time (T) and the formula T=1/f and f= 1/T where f = frequency in Hertz.

Recall the concept of phase difference between two signals, and that it can be expressed in degrees.

A sinusoidal waveform is a graphical representation of how an alternating current or voltage rises and falls smoothly over time. The vertical axis represents the

instantaneous value of voltage or current, while the horizontal axis represents time. To fully describe a sinusoidal waveform, both its amplitude and its frequency must be specified.

The amplitude of an AC waveform is the height of the wave. This may be expressed as the peak value, which is the highest point of the waveform measured from the zero reference line, or as the peak-to-peak value, which is the difference between the highest positive and lowest negative points. The horizontal axis shows time.

The time taken for one complete cycle of the waveform is known as the periodic time (T) and is measured in seconds. Frequency is the number of cycles per second and is measured in hertz (Hz). The relationship between frequency and periodic time is:

$$T = 1 / f$$

$$f = 1 / T$$

A square wave is another form of alternating waveform. It can be recognised graphically by its flat high and low levels and its sudden vertical transitions between them, rather than a smooth curve.

Phase difference describes the relative timing between two waveforms of the same frequency. If the zero crossing points of two waveforms line up vertically on the graph, the signals are said to be in phase.

If the zero crossing points do not line up, then the waveform whose zero crossing appears further to the left on the time axis is said to be leading. The waveform whose zero crossing appears further to the right is said to be lagging. Phase difference is measured in degrees.

If two waveforms are exact mirror images of each other, with one at a positive peak when the other is at a negative peak, they are said to be 180 degrees out of phase. If one waveform's zero crossing is one quarter of a cycle to the left of another, it is leading by 90 degrees. The same waveform can also be described as lagging the other by 270 degrees.

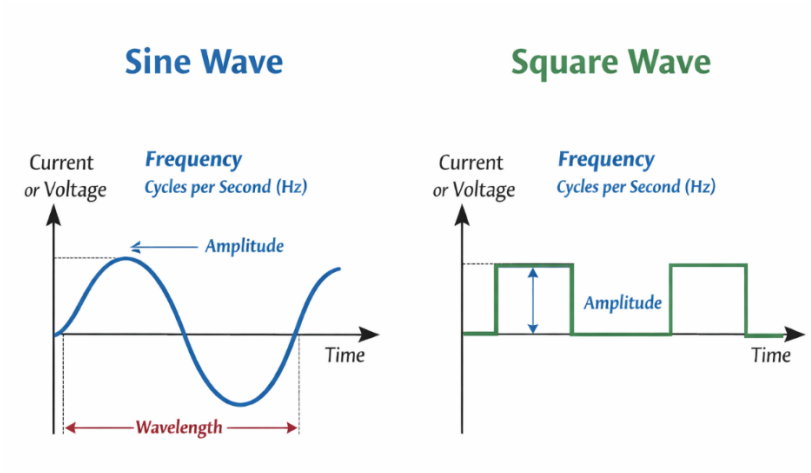

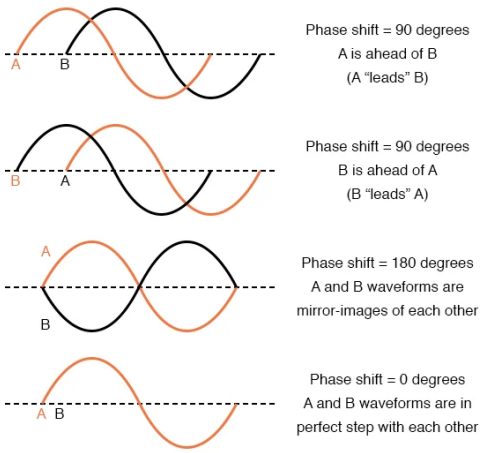

2E3 Recall that the potential difference across and current through a resistor are in phase.

Recall that the power dissipated in a resistive circuit varies over the cycle.

Recall that the RMS current or voltage in an AC circuit is equal to the current or voltage of a DC supply that would result in the same power dissipation.

Recall that the RMS value of a sinusoidal waveform,

$V_{rms} = 0.707 \times V_P$ (peak Voltage)

Perform relevant calculations.

Recall that the term 'Reactance' describes the opposition to current flow in a purely inductive or capacitive circuit where the phase difference between V and I is 90°.

When an AC current flows through a resistor, the voltage across it follows proportionally (Ohm's law), so voltage and current are in phase and there is no phase shift.

However, the instantaneous power is given by:

$$p(t) = v(t)i(t)$$

For a resistor,

$$i(t) = \frac{V(t)}{R}$$

So:

$$p(t) = \frac{V^2(t)}{R}$$

If the supply voltage is sinusoidal, $v(t) = V_p sin(\omega t)$ where ω is the angular frequency in radians per second. $\omega = 2\pi f$ where f is the frequency in Hz. Substituting gives:

$$p(t) = \frac{v_p^2 sin^2(\omega t)}{R}$$

Since $sin^2(\omega t)$is always positive (due to the squaring) then power is also always positive. This reflects the fact that power represents energy dissipated as heat in the resistor. The power therefore varies over the cycle, reaching a maximum twice per cycle. The mean of the voltage waveform over a full cycle is zero, so we don't use simple average voltage. Instead we use the root mean square (RMS) value, defined as the DC voltage that would dissipate the same average power in the resistor.

For DC we know that:

$$P_{DC} = \frac{V_{DC}^2}{R}$$

For AC, the average power is:

$$P_{AC} = \frac{V_{rms}^2}{R}$$

So V_{rms} is the equivalent DC value. For a sinusoidal waveform:

$$V_{rms} = \frac{V_P}{\sqrt{2}} = 0.707V_P$$

Because P∝V2, doubling the power requires multiplying the voltage by $\sqrt{2}$ and halving the power requires dividing voltage by $\sqrt{2}$

For example:

If R = 50Ω and $V_p = 10V$

$$V_{rms} = 0.707 \times 10 = 7.07V$$

$$P = \frac{V_{rms}^2}{R} = \frac{7.07^2}{50} = \frac{49.98}{50} \approx 1W$$

If the same calculation is performed for a DC circuit with $V = 7.07\,V$and $R = 50\,\Omega$, the power dissipation is also $1\,W$. This demonstrates the equivalence of RMS AC voltage and DC voltage in terms of heating effect.

Where voltage and current are out of phase, the circuit must contain either inductance or capacitance. If the voltage leads the current, the circuit is inductive; if the current

leads the voltage, the circuit is capacitive. When the phase difference is 90°, this opposition to current flow is referred to as reactance.

Reactance is frequency dependent. Capacitive reactance is inversely proportional to frequency, while inductive reactance is directly proportional to frequency.

2E4 **Recall** that the ratio of the RMS potential difference to the RMS current as the capacitor stores energy in its electric field is called the reactance of the capacitor and is measured in ohms.

Understand that the reactance of a capacitor depends on the frequency of the alternating current and that the reactance falls as the frequency rises.

Identify the graph of reactance against frequency for the capacitor.

The ratio of the RMS potential difference across a capacitor to the RMS current flowing through it is called the capacitive reactance. Capacitive reactance represents the opposition to alternating current caused by the capacitor storing energy in its electric field, and it is measured in ohms (Ω).

The reactance of a capacitor depends on the frequency of the alternating current. As the frequency increases, the capacitive reactance decreases. The capacitive reactance is given by the formula:

$$X_C = \frac{1}{2\pi f C}$$

Where:

- X_c is the capacitive reactance in ohms.
- f is the frequency in Hz.
- C is the capacitance in farads.

From this relationship it can be seen that capacitive reactance is inversely proportional to frequency. Therefore, as the frequency increases, the value of X_c decreases. Similarly, increasing the capacitance also causes the capacitive reactance to decrease.

A graph of capacitive reactance against frequency shows a downward-sloping curve, with high reactance at low frequencies and low reactance at high frequencies.

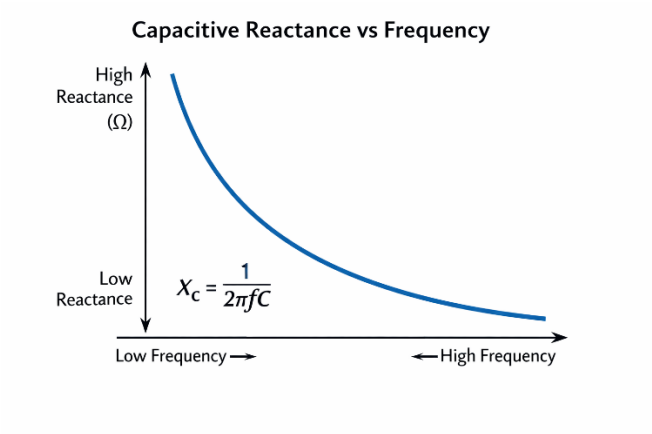

2E5 **Recall** that an inductor will take time to store or release energy in its magnetic field.

Recall that the ratio of the RMS potential difference to the RMS current as the inductor stores energy in its magnetic field is called the reactance of the inductor and is measured in ohms.

Understand that the reactance of an inductor depends on the frequency of the alternating current and that the reactance rises as the frequency rises.

Identify the graph of reactance against frequency for the inductor.

When an alternating current flows through an inductor, a magnetic field is produced around the coil. Energy is stored in this magnetic field, and because the field takes time to build up or collapse, the inductor opposes changes in current. This means an inductor does not respond instantly to changes in current and will take time to store or release energy.

The opposition to alternating current caused by this effect is called inductive reactance. Inductive reactance is defined as the ratio of the RMS potential difference across the inductor to the RMS current flowing through it, and it is measured in ohms.

Inductive reactance depends on the frequency of the alternating current. As frequency increases, the current changes more rapidly, so the inductor opposes these changes more strongly. Therefore, the reactance of an inductor increases as frequency increases.

The graph of inductive reactance against frequency is a straight line rising from the origin, showing that reactance increases linearly with frequency.

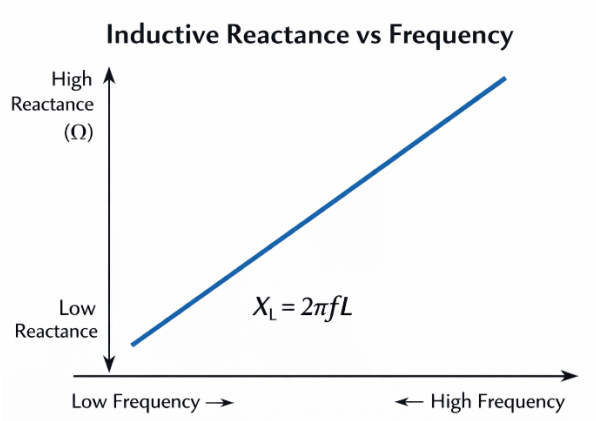

2E6 **Recall** that in a circuit comprising resistors and capacitors or inductors (or both) a current will result in energy transfer into heat in the resistors and energy storage and release in the capacitors or inductors.

Recall that in such a circuit the ratio of the overall potential difference to current is termed 'impedance' and that this name denotes an opposition to both energy transfer and energy storage in the circuit.

Recall impedance is measured in ohms.

Note: Phase and vector notation is NOT included at this level.

n a circuit containing resistors and capacitors or inductors, energy is transferred into heat in the resistors, while energy is stored and released in the electric fields of capacitors or the magnetic fields of inductors.

When resistance and reactance are present together, the circuit exhibits impedance. Impedance is the total opposition a circuit presents to an alternating current and results from two effects: opposition to energy transfer in resistors and opposition due to energy storage and release in capacitors and inductors.

Resistance causes energy to be dissipated as heat, whereas reactance arises because energy stored in electric or magnetic fields must be built up and released, preventing current and voltage from changing instantly. Reactance depends on frequency.

Although impedance depends on both resistance and reactance, resistance and reactance cannot simply be added together to find impedance, as they represent different types of opposition. Impedance therefore describes the overall effect of both energy transfer and energy storage in the circuit.

In a circuit containing resistors and capacitors or inductors, impedance is defined as the ratio of the overall RMS potential difference to the RMS current. Impedance is measured in ohms and is given the symbol Z.

2E7 **Recall** and manipulate the formula v = f × λ.

Calculate frequency or wavelength given the other parameter.

The velocity of radio waves will be given in the Reference Booklet.

The relationship between the velocity of a radio wave, its frequency, and its wavelength is given by:

$$v = f \times \lambda$$

where:

v is the velocity of the radio wave (in metres per second),

f is the frequency (in hertz),

λ is the wavelength (in metres).

The velocity of radio waves will be given in the Reference Booklet and is approximately 300×10^6 m/s. If the frequency is known, the wavelength can be calculated by rearranging the formula:

$$\lambda = \frac{v}{f}$$

Since the velocity is approximately 300×10^6 m/s and frequency is often given in megahertz (MHz), a convenient shorthand is:

$$\lambda\ (\mathrm{m}) = \frac{300}{f(MHz)}$$

Similarly, if the wavelength is known, the frequency can be calculated using:

$$f = \frac{v}{\lambda}$$

2E8 **Understand** that where a conductor is carrying an RF signal which has a wavelength comparable to the length of the conductor that the magnitude and direction of the current and voltage at any point in time will vary in a sinusoidal manner along the length of the conductor.

When a conductor is long enough to be a significant fraction of the wavelength of the RF signal, the current and voltage are no longer the same everywhere along its length.

If time is frozen and the current is measured at different positions along the feeder, the current varies smoothly with distance in a sinusoidal pattern. There are fixed points along the feeder where the current is zero, and these points occur every half wavelength.

Between these zero-current points, the current reaches maximum values that alternate in direction. This repeating pattern of current along the length of the feeder is known as a standing wave.

Digital signals

2F1 **Recall** that digital signals with more bits and/or increased sampling rate enables a more accurate representation of the analogue signal.

Recall that the error introduced by sampling the analogue signal to produce the digital signal is a form of distortion.

Recall that the minimum sampling rate needs to be greater than twice the frequency of the analogue signal to adequately capture the detail of the analogue signal being sampled.

Recall that the minimum sampling rate is known as the Nyquist rate.

An analogue signal has a continuously varying voltage. To convert it into a digital signal, the voltage is sampled at fixed, known intervals and each sample is represented by a numerical value with a fixed bit depth.

Increasing the bit depth allows the voltage to be represented more accurately, as smaller changes in voltage can be resolved. Increasing the sampling rate allows the signal to be measured more frequently, giving a more accurate representation of how the signal changes over time. Using more bits and a higher sampling rate therefore results in a more accurate digital representation of the original analogue signal.

However, increasing bit depth or sampling rate is not always desirable, as it increases the amount of data that must be processed, stored, or transmitted. This places greater demands on processing power, memory, and bandwidth, so a balance must be chosen between accuracy and system complexity.

Sampling an analogue signal and representing it digitally always introduces some error, because the signal is measured only at discrete moments in time and with limited resolution. This error is a form of distortion, meaning that a reconstructed analogue signal will not be perfectly identical to the original.

To accurately capture the detail of an analogue signal, the sampling rate must be greater than twice the highest frequency present in the signal. This minimum sampling rate is known as the Nyquist rate.

Transformers

2G1 **Understand** that a simple transformer consists of two coils of wire sharing the same magnetic field.

Recall that it may have an iron core to concentrate the field.

Understand that at higher frequencies (e.g. RF and IF) a ferrite core, rather than an iron core, is used for improved efficiency.

Understand that energy is transferred from one coil to the other by changes in the field when alternating current is used, and that this does not happen with constant direct current.

Understand that an alternating potential difference (such as the mains) can be stepped down using fewer turns of wire on the secondary coil than the primary and can be stepped up using more turns on the secondary than on the primary.

Understand that the output from a transformer will always be an alternating current.

Note: Note that knowledge of the impedance change is not required.

A simple transformer consists of two coils of wire placed close together so that they share the same magnetic field. The coil connected to the supply is called the primary, and the coil connected to the output is called the secondary.

When an alternating current flows in the primary coil, it produces a changing magnetic field. This changing magnetic field induces an alternating voltage in the secondary coil. Energy is transferred from the primary to the secondary by this changing magnetic field. This process does not occur with constant direct current, because once the current becomes steady the magnetic field no longer changes and no voltage is induced in the secondary.

To concentrate the magnetic field and improve efficiency, the coils are usually wound on a core. At low frequencies, such as mains electricity, iron cores are used. At higher frequencies, such as radio frequency (RF) and intermediate frequency (IF), ferrite cores are used because iron cores suffer high losses at high frequencies.

If the primary and secondary coils have the same number of turns, the transformer is a 1:1 transformer, and the output voltage will be approximately the same as the input voltage. This type of transformer is often used for electrical isolation between circuits.

If the secondary coil has more turns than the primary, the output voltage will be higher than the input voltage. This is known as a step-up transformer. If the secondary has fewer turns than the primary, the output voltage will be lower. This is known as a step-down transformer. In both cases, the current changes inversely to the voltage so that energy is conserved.

The output of a transformer is always alternating current, because transformer action depends on a changing magnetic field.

A transformer may have more than one secondary coil in order to provide multiple output voltages.

Tuned Circuits and resonance

2H1 **Recall** that a series or parallel circuit of a capacitor and inductor together forms a tuned circuit.

Recall, using graphical methods, that at resonance the reactance of the capacitance will equal the reactance of the inductance, $X_C = X_L$.

When a capacitor and an inductor are connected together in either a series or a parallel arrangement, they form a tuned circuit. Such a circuit is frequency selective because the reactance of the capacitor and the reactance of the inductor vary with frequency in opposite ways.

In a tuned circuit, energy is alternately stored in the electric field of the capacitor and the magnetic field of the inductor. As the capacitor discharges, current flows through the inductor and builds a magnetic field. As this magnetic field collapses, it induces a voltage that recharges the capacitor with opposite polarity. This exchange of energy continues until losses in the circuit dissipate the energy.

The frequency at which this energy exchange naturally occurs is called the resonant frequency. At resonance, the capacitive reactance and inductive reactance are equal in magnitude:

$$X_C = X_L$$

Using graphical methods, this can be seen at the point where the reactance–frequency curves for the capacitor and inductor intersect. At this frequency, the opposing reactances cancel, giving the tuned circuit its characteristic behaviour.

Because of this, tuned circuits have an impedance that varies strongly with frequency and can be used to select or reject particular frequencies.

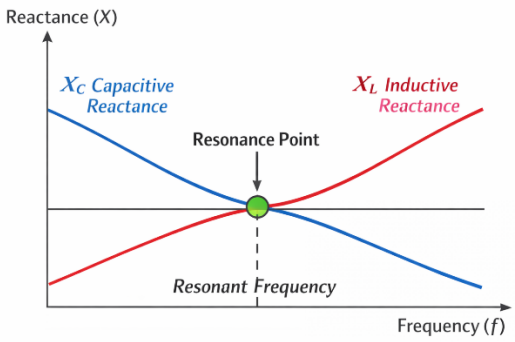

At Resonance: $X_C = X_L$

2H2 **Recall** that, at their resonant frequencies, series tuned circuits present a low impedance, whereas parallel tuned circuits present a high impedance.

Identify the response curves of impedance vs frequency for series and parallel resonant circuits.

At resonance, the inductive and capacitive reactances in a tuned circuit are equal in magnitude. However, whether the circuit presents a low or high impedance at resonance depends on whether the inductor and capacitor are connected in series or in parallel.

In a series tuned circuit, the capacitor dominates at low frequencies and presents a high impedance, while the inductor dominates at high frequencies and also presents a high impedance. At the resonant frequency, the inductive and capacitive reactances cancel each other, leaving only the resistance of the circuit. As a result, the impedance is at a minimum at resonance.

In a parallel tuned circuit, the capacitor presents a low impedance at high frequencies and the inductor presents a low impedance at low frequencies, so current can flow through either branch. At the resonant frequency, currents circulate between the inductor and capacitor, and very little current is drawn from the supply. As a result, the circuit presents a maximum impedance at resonance.

2H3 **Recall** that the energy stored in the capacitor and inductor in a tuned circuit can transfer from one to the other at a particular frequency, known as the resonant frequency.

Recall how the resonant frequency depends on the value of capacitance and inductance.

Note that candidates must know that increasing L or C reduces the resonant frequency and vice-versa.

Knowledge of the resonant frequency formula is not required.

In a tuned circuit containing a capacitor and an inductor, energy is repeatedly transferred between the electric field of the capacitor and the magnetic field of the inductor. When the capacitor discharges, current flows through the inductor and energy is stored in its magnetic field. As the magnetic field collapses, it drives current back into the capacitor, recharging it with the opposite polarity. This exchange of energy continues back and forth.

The frequency at which this energy transfer naturally occurs is called the resonant frequency of the tuned circuit. At this frequency, the inductive and capacitive effects balance each other, allowing the circuit to respond strongly to signals at that frequency.

The resonant frequency depends on the values of the inductance and capacitance in the circuit. Increasing either the inductance or the capacitance causes the energy exchange to take longer, which reduces the resonant frequency. Conversely, decreasing the inductance or the capacitance allows the energy to transfer more quickly, which increases the resonant frequency.

2H4 **Recall** that selectivity of a tuned circuit is the ratio of the bandwidth of the circuit (that is the range of frequencies the circuit will accept) to the resonant frequency.

Recall that the Q factor of a tuned circuit is an indication of the selectivity of the tuned circuit.

Selectivity is the ability of a tuned circuit to respond to signals within a limited range of frequencies while rejecting signals outside that range. The centre of this range is the resonant frequency of the circuit.

As the frequency moves away from resonance, the output of the circuit falls. The points at which the output power has fallen to half its maximum value are known as the –3 dB points. These occur at frequencies either side of resonance and define the cut-off frequencies of the circuit. In voltage terms, the -3 dB point corresponds to an output voltage of approximately 0.707 of the maximum value.

The frequency range between the two –3 dB points is called the bandwidth of the tuned circuit.

The Q factor of a tuned circuit is an indication of its selectivity and is equal to the ratio of the resonant frequency to the bandwidth. A high Q factor indicates high selectivity and a narrow bandwidth, while a low Q factor indicates lower selectivity and a wider bandwidth.

2H5 Identify the circuits of simple low pass, high pass, band pass and band stop (notch) filters and their response curves.

Recall, using graphical methods, the concept of the cut-off frequency.

Semiconductor devices

2I1 **Recall** that a diode will conduct current in one direction only.

Recall that a diode junction has a depletion layer and that a voltage must be applied to overcome this and allow current to flow (forward bias).

Understand the use of a diode to produce direct current from an alternating current is known as rectification.

A diode is an electronic component that allows current to flow in one direction only.

A diode is formed from two different types of semiconductor material joined together to form a junction. One side is P-type material, which has a shortage of electrons and is said to contain holes. The other side is N-type material, which has an excess of free electrons.

At the junction between the P-type and N-type materials, electrons and holes combine, leaving a thin region with no free charge carriers. This region is called the depletion layer, and it acts as an insulator.

When a voltage is applied so that the P-type side is positive and the N-type side is negative, the diode is said to be forward biased. If the applied voltage is high enough to overcome the depletion layer, electrons are able to cross the junction and current flows through the diode.

If the voltage is applied in the opposite direction, the depletion layer becomes wider and no current flows. This means the diode blocks current in the reverse direction.

Because a diode allows current to flow in only one direction, it can be used to convert alternating current into direct current. This process is known as rectification.

2I2 **Recall** that a variable capacitance diode behaves like a capacitor when reverse biased and that the capacitance of a reverse biased diode depends on the magnitude of the reverse bias.

A variable capacitance diode, also known as a varicap or varactor diode, is a diode that is operated only in reverse bias. When reverse biased, no current flows through the diode, but the depletion layer at the P–N junction behaves like the dielectric of a capacitor.

As the reverse bias voltage increases, the depletion layer becomes wider, which reduces the capacitance. When the reverse bias voltage is reduced, the depletion layer

becomes narrower and the capacitance increases. The capacitance of the diode therefore depends on the magnitude of the reverse bias voltage.

Because its capacitance can be controlled by a voltage, a varicap diode can be used as a voltage-controlled capacitor, commonly in oscillators and tuning circuits to vary frequency electronically.

2I3 **Understand** that a bipolar junction transistor is a three terminal device (emitter, base, collector) in which a small base current will control a larger collector current and this enables the transistor to be used as an amplifier.

Understand that the ratio of the collector current to the base current $\frac{I_C}{I_B}$ is the current gain ß or hFE of the transistor.

Understand that if the variation in the base current is large enough the collector current can be turned on and off and the transistor behaves as a switch.

Note: the candidate is not required to recall transistor configurations.

Circuits shown will be an NPN transistor connected in common emitter mode.

A bipolar junction transistor (BJT) is a three-terminal semiconductor device consisting of either an NPN or PNP arrangement. The three terminals are called the emitter, base, and collector.

In an NPN transistor, when a suitable forward voltage is applied between the base and emitter, typically about 0.6–0.7 V, the base–emitter junction becomes forward biased. This allows a small current to flow into the base. This small base current controls a much larger current flowing between the collector and emitter.

The ratio of the collector current to the base current is known as the current gain of the transistor and is given the symbol β (beta) or hFE:

$$\beta = \frac{I_C}{I_B}$$

Because a small change in base current produces a much larger change in collector current, the transistor can be used as an amplifier.

If the base current is varied between zero and a value large enough to allow maximum collector current to flow, the transistor can be turned fully off or fully on. In this case, the transistor behaves as a switch rather than a linear amplifier.

2I4 **Recognise** the circuit of a simple common emitter amplifier.

Recall that semiconductors must be provided with the correct DC voltages and currents to allow them to function and that this is termed biasing.

Note that calculations are not required.

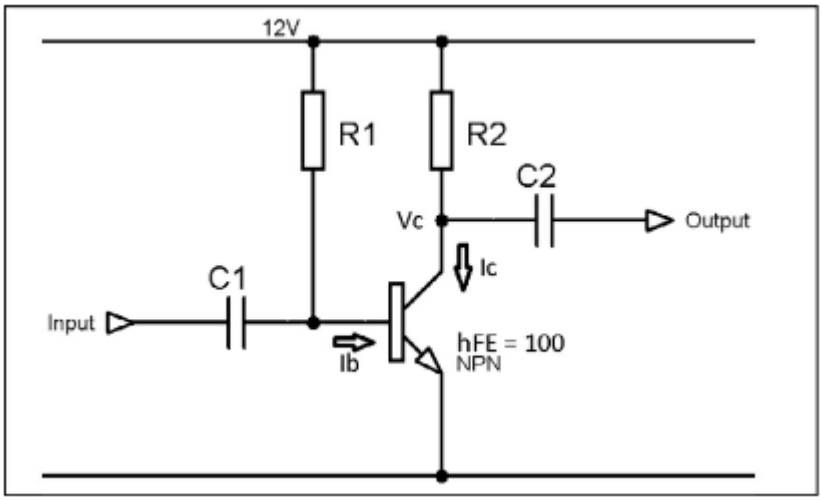

Common Emitter Amplifier

A common emitter amplifier uses a bipolar junction transistor in which a small AC signal applied to the base controls a much larger current flowing between the collector and emitter.

Semiconductors must be provided with suitable DC voltages and currents in order to operate correctly. This is known as biasing. In this circuit, resistor R1 provides a small DC base current which biases the transistor so that it is partially conducting even when no input signal is present. This allows the transistor to amplify both positive and negative halves of the AC input signal without distortion.

Capacitor C1 blocks any DC component from the input signal source while allowing the AC signal to pass to the base. This ensures that the bias conditions set by R1 are not affected by external circuitry.

A small change in base current produces a much larger change in collector current, determined by the current gain hFE of the transistor. For example, with a gain of 100, a base current of 1 mA would produce a collector current of approximately 100 mA.

Resistor R2 acts as the collector load. Changes in collector current cause changes in the voltage drop across R2. When the collector current increases, the voltage drop across R2 increases and the collector voltage falls. When the collector current decreases, the voltage drop across R2 decreases and the collector voltage rises.

Capacitor C2 blocks the DC voltage at the collector while allowing the amplified AC signal to be passed to the output.

2I5 **Recall** that a transistor can be used to generate audio and radio frequencies by maintaining the oscillations in a tuned or frequency selective circuit.

Distinguish between a crystal oscillator and a variable frequency oscillator (VFO) based on a tuned circuit.

Note: Diagrams will show the Colpitts oscillator with the transistor in emitter follower mode.

Candidates are not expected to recognise other types of oscillator.

A transistor can be used to generate audio or radio frequency signals by maintaining oscillations in a frequency-selective circuit. This is achieved by using the transistor as an amplifier and feeding part of the output signal back to the input with the correct phase so that the signal reinforces itself. If the feedback path includes a tuned or frequency-selective circuit, oscillation will occur at a specific frequency. Component selection will need to be careful to ensure the oscillator is stable and doesn't drift.

In a crystal oscillator, the frequency is determined by a quartz crystal. Quartz crystals exhibit mechanical resonance at a very precise frequency and are extremely stable. Because of this, crystal oscillators have excellent frequency stability and very low drift. A small trimmer capacitor may be included to allow fine adjustment of the frequency, but the frequency cannot be varied significantly. Crystal oscillators are therefore used where a fixed, accurate frequency is required.

If multiple fixed frequencies are required, this can be achieved by switching between different crystals.

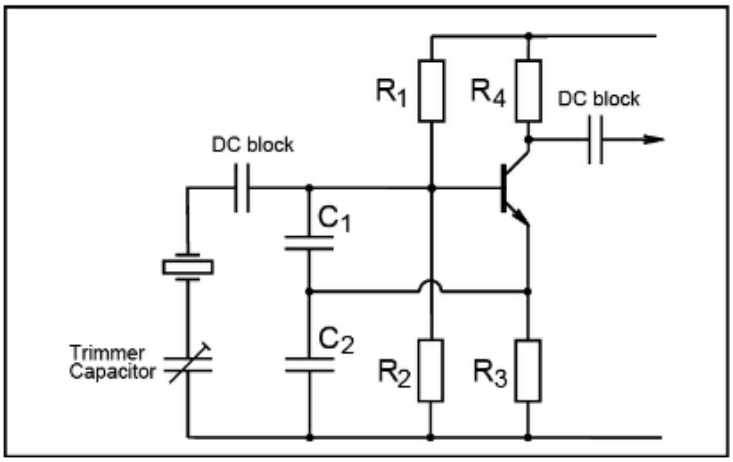

Basic Colpitts Crystal Oscillator

A more flexible alternative is the variable frequency oscillator (VFO). A VFO uses the same overall Colpitts oscillator structure, but instead of a crystal and trimmer capacitor, it uses a tuned circuit comprising an inductor and capacitor. By making either the capacitor or inductor variable, the oscillator frequency can be adjusted over a range of frequencies.

The frequency range of the VFO is determined by the minimum and maximum values of the variable capacitor or inductor. Compared with crystal oscillators, VFOs are more susceptible to frequency drift due to temperature changes, power supply variations, and mechanical movement.

Drift can be reduced by using a well-regulated power supply, rigid mechanical construction, screened enclosures, temperature-stable components, and by following the oscillator with a buffer stage. Frequency stability is particularly important to ensure that transmissions remain within the permitted frequency band.

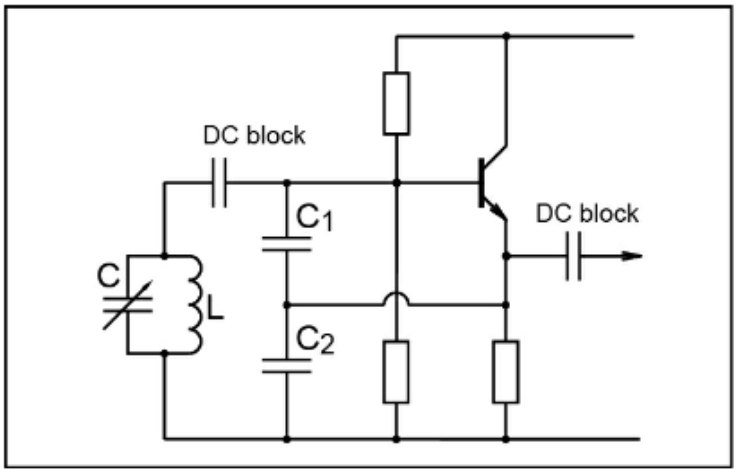

A Colpitts-type Variable Frequency Oscillator

2I6 **Recall** that many individual semiconductor devices may be built on a common substrate and packaged as an integrated circuit (IC).

Recall that ICs may provide complete circuit functions, including, amplifiers, oscillators, voltage regulators and digital processing chips in a single package.

Questions will be limited to the IC applications shown above.

An integrated circuit (IC) is a device in which many individual semiconductor components, such as transistors, diodes, resistors, and capacitors, are fabricated on a single piece of semiconductor material, usually silicon. This base material is known as the substrate.

By combining many components on a common substrate, complex circuits can be produced in a very small physical package. These components are interconnected during manufacture, forming a complete circuit within a single device.

Integrated circuits can provide complete circuit functions, including amplifiers, oscillators, voltage regulators, and digital processing circuits, all within one package. ICs offer advantages such as reduced size, improved reliability, lower cost, and

consistent performance compared with circuits built from individual discrete components.

Cells and power supplies

2J1 **Recall** that different technologies used in cells give different terminal voltages.

Recall that battery capacity (stored charge) is measured in Ampere-hours (Ah).

A cell is a single electrochemical device that produces a voltage as a result of a chemical reaction. Different cell technologies produce different terminal voltages, depending on the chemistry used. Common cell chemistries include alkaline, nickel-cadmium (NiCd), nickel-metal hydride (NiMH), lithium, and lead-acid.

A battery is one or more cells combined into a single unit to provide a required voltage and capacity.

Cells may be classified as:

- Primary cells, which cannot be recharged
- Secondary cells, which can be recharged

Even when cells are the same physical size, their chemistry and terminal voltage may differ, so care must be taken when replacing batteries. Different rechargeable chemistries require different charging methods, and using an incorrect charger may damage the battery or create a fire risk. Lithium-based cells, in particular, can be hazardous if incorrectly charged due to their high energy density.

The capacity of a battery is a measure of the amount of charge it can store and is measured in ampere-hours (Ah) or milliampere-hours (mAh). This indicates the current a battery can supply for one hour before becoming discharged.

2J2 **Recall** the circuit diagrams and characteristics of different types of rectifier and smoothing circuit (i.e. half wave, full wave and bridge).

A rectifier is a circuit that converts alternating current (AC) into direct current (DC) by allowing current to flow in only one direction using diodes.

A half-wave rectifier uses a single diode. The diode conducts on one half-cycle of the AC waveform and blocks the other half-cycle, producing a series of pulses all of the same polarity. This method is simple but inefficient, as only half of the input waveform is used. The diode's forward voltage causes an additional voltage loss.

A full-wave rectifier uses two diodes and a centre-tapped transformer. Each diode conducts on alternate half-cycles, so both halves of the AC waveform are used. This

produces pulses at twice the frequency of a half-wave rectifier and gives a higher average output voltage and improved efficiency.

A bridge rectifier uses four diodes arranged so that both halves of the AC waveform are rectified without requiring a centre-tapped transformer. On each half-cycle, two diodes conduct and produce an output of the same polarity. Bridge rectifiers are widely used because they work with standard transformers, although two diode forward voltage drops are present in the output path.

A smoothing capacitor, often called a reservoir capacitor, is connected across the rectifier output and in parallel with the load. The capacitor charges to the peak voltage of the rectified waveform and discharges between peaks, reducing voltage ripple and producing a smoother DC output.

2J3 **Understand** that in a rectifier circuit a reservoir capacitor can store a charge during the conducting part of the cycle and release it during the non-conducting part, providing a smoothing effect and a smoother DC output.

Identify the AC and rectified (pulsed DC) Waveforms.

In a rectifier circuit, the output consists of a pulsed DC waveform, where the voltage rises during the conducting part of each cycle and falls during the non-conducting part. A reservoir capacitor connected across the rectifier output and in parallel with the load helps to smooth this waveform. During the conducting part of the cycle, the capacitor charges up to (almost) the peak value of the rectified voltage. When the rectifier stops conducting, the capacitor discharges slowly through the load, supplying current until the next conducting cycle occurs.

This action reduces the depth of the voltage drops between peaks. If the capacitance is large enough for the load current, the gaps between pulses are largely filled in, producing a smoother DC output with reduced ripple.

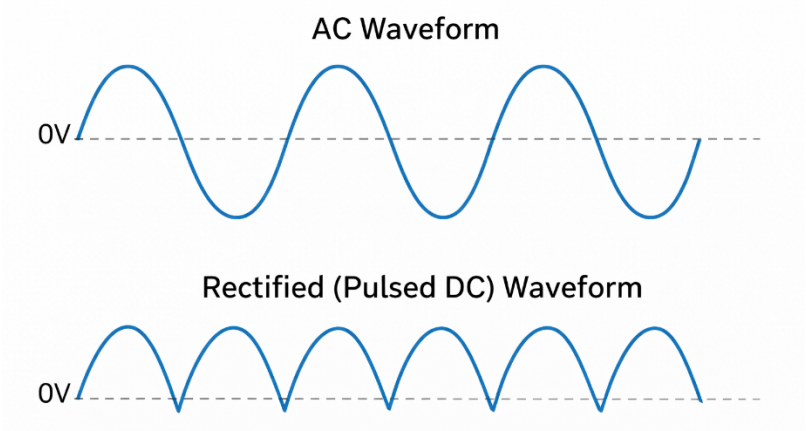

2J4 Identify discrete component and integrated circuit linear power supplies and understand the basic principle of their operation.

Recall the relative merits of linear and switched mode power supplies. Size, efficiency, heat, input and output voltage, RFI, cost & weight.

A linear power supply produces a stable DC output using a transformer, rectifier, smoothing capacitor, and voltage regulator. The incoming AC supply is first stepped down by a transformer to a lower voltage. This is then rectified to produce a pulsed DC waveform. A reservoir capacitor connected in parallel with the load smooths the pulses into a near-DC voltage. Finally, a voltage regulator removes most of the remaining ripple to produce a steady DC output.

The voltage regulator may be constructed from discrete components, such as transistors, resistors, and zener diodes, or it may be provided as an integrated circuit voltage regulator. In both cases, regulation is achieved by dissipating excess voltage as heat. Because of this, linear power supplies are relatively inefficient, generate significant heat, and require large, heavy transformers. However, they produce very little electrical noise and are well suited to radio equipment.

A switched-mode power supply operates differently. Instead of regulating by dissipating excess voltage, it converts the input into a high-frequency switching waveform before transformation and rectification. Operating at high frequency allows much smaller transformers to be used, making switched-mode supplies compact, lightweight, and highly efficient, with far less heat generation. Many switched-mode power supplies can also operate over a wide range of input voltages.

The disadvantage of switched-mode power supplies is that the high-frequency switching action can generate harmonics and radio-frequency interference. If poorly designed or inadequately filtered, this interference can affect radio receivers. For this reason, linear power supplies are often preferred in radio applications where low noise is critical, despite their larger size and lower efficiency.

Section 3 — Transmitters and receivers

Transmitter concepts

3A2 **Recall** the meaning of depth of modulation for amplitude modulation.

Recall the meanings of wide band and narrow band frequency modulation.

Recall the meaning of the term Peak Deviation.

In amplitude modulation (AM), an audio signal is used to vary the amplitude of a radio-frequency (RF) carrier, while the carrier frequency itself remains constant.

The depth of modulation (also called the modulation index) describes how much the carrier amplitude is varied by the audio signal. It is defined as the ratio of the audio signal amplitude to the unmodulated carrier amplitude, and is normally expressed as a percentage:

$$Depth\ of\ modulation = \frac{audio\ amplitude}{carrier\ amplitude} \times 100\%$$

- 0% modulation means no audio signal is present and the carrier amplitude remains constant.
- 100% modulation means the audio signal causes the carrier amplitude to vary from zero at the negative peak of the audio signal to twice the unmodulated carrier amplitude at the positive peak.

For example, at 60% modulation, the carrier amplitude increases to 160% of its unmodulated value at the positive audio peak and falls to 40% of its unmodulated value at the negative audio peak.

In practice, AM transmitters are operated as close as possible to 100% modulation to maximise transmitted power efficiency and audio quality. If the depth of modulation exceeds 100%, over-modulation occurs. This causes distortion of the audio waveform and generates unwanted sidebands, resulting in interference on adjacent frequencies.

d

In frequency modulation (FM), the frequency of the carrier is varied by the audio signal rather than its amplitude. Peak deviation is the maximum frequency shift of the carrier away from its nominal (centre) frequency, measured in hertz.

This shift occurs in both directions, above and below the carrier frequency.

Unlike AM, FM does not have a natural modulation limit such as carrier cut-off. Instead, limits on deviation are imposed by regulations and bandwidth considerations.

The modulation index for FM, usually written as h, is defined as:

$$h = \frac{peak\ deviation}{maximum\ modulating\ (audio) freqency}$$

If h is less than 1, the signal is classified as narrowband FM (NFM). This uses relatively small frequency deviation and occupies a narrower bandwidth. If h is greater than 1, the signal is classified as wideband FM (WFM). This uses larger deviation, gives better audio quality, but occupies more bandwidth.

In practice, narrowband FM is commonly used for voice communications where spectrum efficiency is important, while wideband FM is used where higher audio quality is required.

3A3 **Understand** that single sideband (SSB) is a form of amplitude modulation where one sideband and the carrier have been removed from the transmitted signal.

Understand that SSB is more efficient than AM or FM because power is not used to transmit the carrier and the other sideband.

Understand that a second advantage is that the transmitted signal takes up only half the bandwidth, e.g. 3kHz not 6kHz.

Recall that :

- AM uses less bandwidth than FM
- SSB uses less bandwidth than AM
- CW uses less bandwidth than SSB. Some digital modes may use less bandwidth than any of the above.

In amplitude modulation (AM), a carrier wave is transmitted along with two sidebands, known as the upper sideband and lower sideband, which contain identical audio information. Each sideband occupies the same bandwidth, and the carrier itself conveys no information.

Because the two sidebands are essentially mirror images of each other, one sideband can be removed without losing any of the audio information. In addition, the carrier does not need to be transmitted, as it can be re-inserted or recreated in the receiver. This form of transmission is known as single sideband (SSB).

In SSB transmission, one sideband and the carrier are removed, and only a single sideband is transmitted. This gives two major advantages. First, SSB is more power efficient than AM, because transmitter power is not wasted on a carrier or a redundant

sideband. Second, SSB occupies only half the bandwidth of an equivalent AM signal, typically about 3 kHz instead of 6 kHz for voice signals.

Compared with AM and SSB, frequency modulation (FM) uses a wider bandwidth because the carrier frequency is varied over a range of frequencies. FM therefore occupies more spectrum than AM, but provides improved noise performance and audio quality. FM transmitters operate at constant power, regardless of whether audio is present.

The relative bandwidth efficiency of common modes can therefore be summarised as:

- AM uses less bandwidth than FM
- SSB uses less bandwidth than AM
- CW uses less bandwidth than SSB

Some digital modes use even narrower bandwidths than CW and are therefore very spectrally efficient. However, the overall efficiency of a mode also depends on factors such as data rate and transmission duration.

Transmitter architecture

3B1 **Understand** the block diagrams of CW, AM, SSB and FM transmitters.

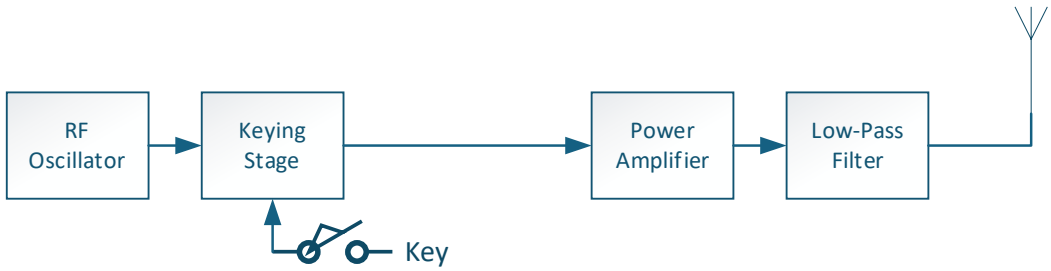

CW Transmitter

In a CW (Continuous Wave) transmitter, a steady RF carrier is generated by the RF oscillator. In a well-designed transmitter, this oscillator runs continuously and is not switched on and off by the key.

The keying stage controls whether the RF signal is passed onwards to the power amplifier. When the key is pressed, the RF signal is allowed through; when the key is released, the signal is blocked. Keying the signal at this stage helps prevent chirp, which would occur if the oscillator frequency changed as it was keyed on and off.

The power amplifier increases the power level of the keyed RF signal to the required transmit level. The keying stage is placed before the power amplifier so that the amplifier is not abruptly switched, reducing key clicks and unwanted spectral splatter.

Finally, the amplified RF signal passes through a low-pass filter, which removes harmonics generated by the power amplifier before the signal is fed to the antenna.

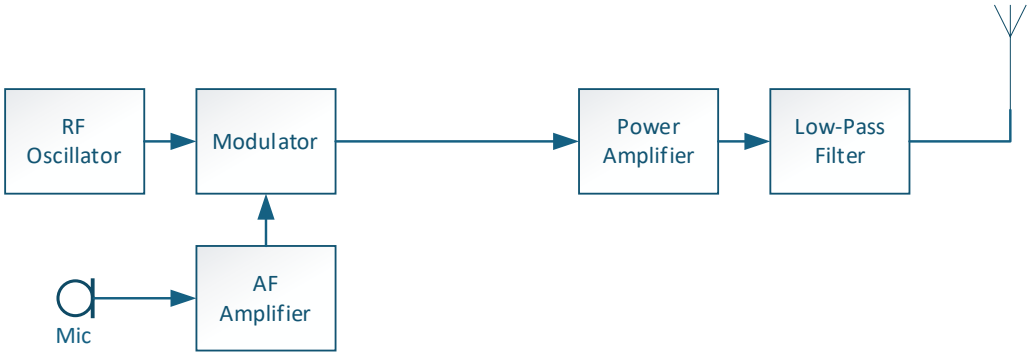

AM Transmitter

In an AM transmitter, the RF oscillator runs continuously at the carrier frequency.
The microphone converts the operator's speech into an electrical audio signal. This signal is very weak and contains a wide range of frequencies. The AF amplifier increases the amplitude of the audio signal and limits its bandwidth, typically to about 300 Hz to 3 kHz, to ensure efficient transmission and prevent unnecessary bandwidth use.
The amplified audio signal is then applied to the modulator, where it is combined with the RF carrier. The modulator varies the amplitude of the RF carrier in accordance with the audio signal, producing an amplitude-modulated RF signal.
This modulated RF signal is fed into the power amplifier, which increases the power of the signal to the required transmit level while preserving the modulation.
Finally, the output passes through a low-pass filter, which removes harmonics generated by the power amplifier before the signal is applied to the antenna.

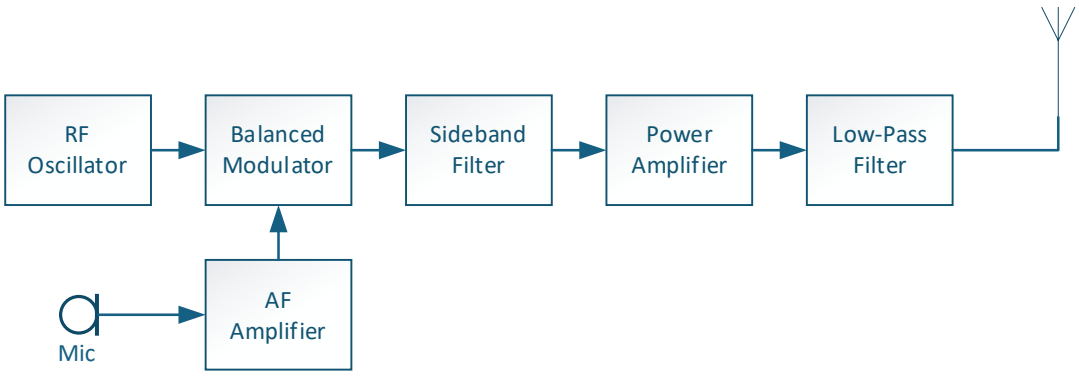

SSB Transmitter

An SSB transmitter follows a similar input signal path to an AM transmitter, using an AF amplifier for the microphone signal and an RF oscillator to generate the carrier frequency.

The microphone produces a low-level audio signal, which is amplified and bandwidth-limited by the AF amplifier.

The audio signal and the RF carrier are applied to a balanced modulator. Unlike a conventional AM modulator, the balanced modulator suppresses the carrier, producing an output that consists only of the upper and lower sidebands.

The output of the balanced modulator is then fed to a sideband filter, which removes either the upper sideband or the lower sideband. The choice of sideband depends on the design of the transmitter or the operating mode selected by the user.

The remaining single sideband signal is passed to the power amplifier, where its RF power is increased to the required transmit level.

Finally, the signal passes through a low-pass filter, which removes any harmonics generated by the power amplifier before the signal is applied to the antenna.

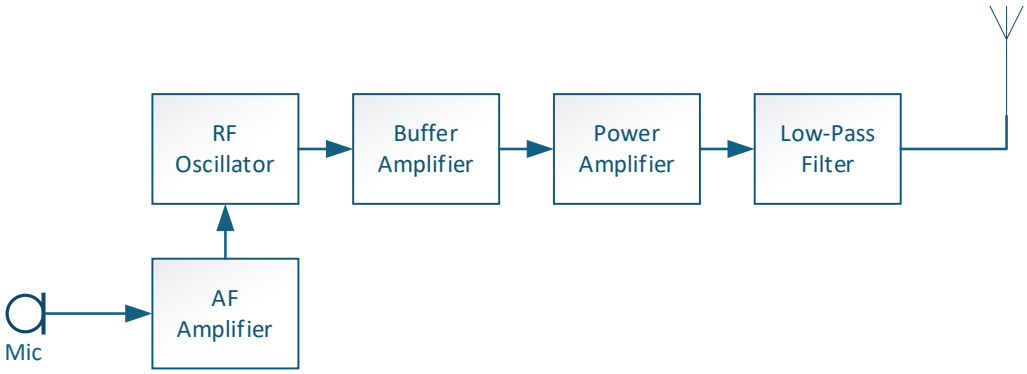

FM Transmitter

In an FM transmitter, the microphone produces a low-level audio signal which is amplified and bandwidth-limited by the AF amplifier.

The key difference from AM and SSB is that the amplified audio signal is used to vary the frequency of the RF oscillator, rather than its amplitude. This means the carrier frequency is continuously shifted above and below its nominal value in accordance with the audio signal.

The amount of frequency deviation is proportional to the amplitude of the audio signal, not the audio frequency itself. Higher audio amplitudes cause greater frequency deviation, while silence produces no deviation.

The output of the RF oscillator is fed to a buffer amplifier. The buffer amplifier isolates the oscillator from changes in load caused by later stages, helping to prevent frequency drift and unwanted modulation effects.

The signal then passes to the power amplifier, which increases the RF power to the required transmit level without altering the modulation.

Finally, the amplified RF signal is passed through a low-pass filter, which removes harmonics generated by the power amplifier before the signal is applied to the antenna.

Oscillators

3C1 **Recall** and understand the relative advantages and disadvantages of a crystal oscillator and a VFO.

Recall that the resonant frequency of the tuned circuit in a VFO determines the frequency of oscillation.

A crystal oscillator uses a quartz crystal to determine its operating frequency. Because of the physical properties of the crystal, the oscillation frequency is very stable and highly accurate, but it is also fixed and not easily varied. Only very small changes in frequency can be made, usually by adding a small series or parallel reactance. Crystal oscillators are therefore used where a single, precise frequency is required, such as reference oscillators or fixed-frequency stages in transmitters and receivers.

A variable frequency oscillator (VFO) uses a tuned circuit, consisting of an inductor and a capacitor, to determine the frequency of oscillation. The resonant frequency of this tuned circuit sets the output frequency, which can be easily varied by adjusting the capacitor or inductor. This makes VFOs convenient when a range of frequencies is required.

However, VFOs are less stable than crystal oscillators and are more prone to frequency drift due to temperature changes, mechanical movement, or variations in supply

voltage. For this reason, VFOs often require a well-regulated power supply and may include a buffer amplifier to isolate the oscillator from load changes and improve stability.

3C2 **Recall** that the frequency stability of an oscillator can be improved by rigid mechanical construction, screening the oscillator enclosure, a regulated DC supply and a buffer amplifier immediately after the oscillator circuit.

Understand that a lack of stability (drift) may result in operation outside the amateur bands.

Recall that most modern oscillators are digital synthesisers, which are very stable and are based on a crystal reference.

The frequency stability of an oscillator can be improved by a number of practical measures. Rigid mechanical construction helps prevent frequency changes caused by vibration or movement of components. Screening the oscillator enclosure reduces the effect of stray electromagnetic fields that could alter the oscillator frequency.

Because the frequency of many oscillators, particularly VFOs, is affected by changes in supply voltage, a well-regulated DC power supply is essential for good stability. In addition, changes in the load connected to the oscillator can cause frequency drift. To prevent this, a buffer amplifier is often placed immediately after the oscillator circuit to isolate it from variations in load.

If an oscillator is unstable, its frequency may drift, which can result in transmission outside the allocated amateur bands or cause interference to nearby signals. Maintaining good frequency stability is therefore important to ensure compliance with licence conditions.

Most modern radio equipment uses digital frequency synthesisers rather than analogue oscillators. These are typically based on a crystal reference, which provides excellent frequency accuracy and long-term stability. Digital synthesisers are usually implemented within integrated circuits and are far less susceptible to temperature changes, supply voltage variation, and load effects than traditional analogue oscillators.

3C3 **Recall** that digital signals can be used to generate audio and RF signals by Direct Digital Synthesis (DDS).

Recall the meaning of DDS.

Recall that a Direct Digital Synthesiser generates audio and RF signals from pre-set digital values held in a memory, or Lookup Table.

Direct Digital Synthesis (DDS) is a method of generating audio and radio-frequency signals using digital techniques. In a DDS system, a digital processor controls a Direct Digital Synthesiser, usually implemented as an integrated circuit.

A DDS generates sine waves by using pre-set digital values stored in a memory, often called a lookup table. This table contains numerical values that represent points along one cycle of a sine wave. These values are read out sequentially and passed to a digital-to-analogue converter (DAC), which converts the digital values into a corresponding analogue voltage. The result is a stepped approximation of a sine wave, which is then smoothed by filtering.

The output frequency of the DDS is controlled by the rate at which the lookup table is read. By changing how quickly the internal counter steps through the stored values, the DDS can generate different frequencies with very high accuracy and stability.

Because DDS systems are digitally controlled and usually referenced to a crystal oscillator, they provide excellent frequency stability, fine frequency resolution, and are widely used in modern radio equipment to generate both audio and RF signals.

Microphone amplifiers and modulators

3E1 **Recall** that a Balanced Modulator is used to produce two sidebands whilst suppressing the carrier.

A balanced modulator is used to produce two sidebands while suppressing the carrier. It takes inputs from the RF oscillator and the audio amplifier and combines them in such a way that the carrier frequency is cancelled out.

Unlike a conventional AM modulator, which produces a carrier and two sidebands, the balanced modulator is arranged so that the carrier components from each part of the circuit oppose each other and cancel. As a result, the output consists only of the upper and lower sidebands, with the carrier largely removed.

Balanced modulators are used in single sideband (SSB) transmitters, where the suppressed-carrier, double-sideband signal is then passed through a sideband filter to remove one of the sidebands, leaving a single sideband for transmission.

3E2 **Understand** that an SSB filter is a Band Pass Filter that will only allow one sideband to pass to the Power Amplifier.

Recall that in an analogue transmitter, SSB filters are normally constructed from a number of quartz crystals or other resonators.

An SSB filter is a band-pass filter that selects only one sideband, either the upper sideband or the lower sideband, from the output of a balanced modulator. The balanced modulator produces two sidebands with the carrier suppressed, and the SSB filter removes the unwanted sideband so that only a single sideband is passed to the RF power amplifier.

In an analogue transmitter, SSB filters are normally constructed using a number of quartz crystals arranged to form a very sharp band-pass filter. Crystal filters are used because they provide precise frequency control and steep filter skirts, which are necessary to effectively separate the closely spaced sidebands. In some designs, other resonant components such as inductors and capacitors arranged in tuned circuits may also be used, although crystal filters are more common for high selectivity.

By allowing only one sideband to pass, the SSB filter ensures that the transmitted signal occupies a narrow bandwidth and makes efficient use of transmitter power.

3E3 **Recall** that a variable capacitance diode can be used in an oscillator to produce frequency modulation (FM).

In an FM transmitter, the RF carrier is generated by an oscillator that contains a tuned circuit made up of an inductor and a capacitor. The oscillator frequency depends on the values of L and C in that tuned circuit. If the capacitance increases, the oscillator frequency falls. If the capacitance decreases, the oscillator frequency rises. When a varicap diode is used as the capacitor in (or part of) the tuned circuit, applying the audio signal to the diode changes its reverse bias voltage. Increasing the reverse bias widens the depletion layer and reduces the capacitance, while decreasing the reverse bias narrows the depletion layer and increases the capacitance. As the audio voltage rises and falls, the capacitance of the varicap rises and falls, causing the oscillator frequency to move above and below the centre frequency, which results in frequency modulation. The amplitude of the audio signal determines how much the frequency shifts, which is the frequency deviation.

RF Power amplifiers

3F1 **Understand** the concept of the efficiency of an amplifier stage and estimate expected RF output power for a given DC input power, given the stage's efficiency.

The efficiency of an amplifier stage is a measure of how effectively it converts DC input power into RF output power. It is defined as the ratio of RF output power to DC input power and is usually expressed as a percentage.

Efficiency can be written conceptually as:

$$Efficency\ (\%) = \frac{RF\ output\ power}{DC\ input\ power}$$

In an RF power amplifier, the DC input power is taken from the power supply, while the RF output power is delivered to the load or antenna. Any power not converted into RF output is lost as heat. The RF output power can be estimated by multiplying the DC input power by the efficiency of the amplifier stage.

For example, if an RF amplifier draws 8 A at 12 V, the DC input power is:

12 × 8 = 96 W

If the amplifier is a Class A stage with a typical efficiency of 35%, the estimated RF output power is:

96 × 0.35 = 33.6 W

Typical efficiencies of RF amplifier classes

- Class A: about 35%
- Class B: about 50%
- Class C: about 67%

Higher efficiency means less power is wasted as heat, but generally comes at the cost of reduced linearity.

Transmitter interference

3G2 **Recall** that oscillators, mixers and amplifiers can produce harmonics which are multiples of the fundamental frequency.

Recall that harmonics can cause interference to other amateur bands and other radio users.

Oscillators, mixers, and amplifiers are designed to operate at a fundamental frequency, but because they are not perfectly linear devices, they can also generate additional unwanted signals. These unwanted signals are called harmonics.

Harmonics are frequencies that are integer multiples of the fundamental frequency. For example, if the fundamental frequency is 7.1 MHz, the second harmonic will be 14.2 MHz, the third harmonic will be 21.3 MHz, and so on.

Harmonics are generally undesirable because they may fall within other amateur bands or outside the amateur allocations entirely, where they can cause interference to other radio services. This is particularly important because transmitting harmonic energy outside the permitted band would breach licence conditions.

To prevent harmonics from being transmitted, filters, typically low-pass filters, are fitted after power amplifiers. These filters allow the fundamental frequency to pass while greatly reducing the level of harmonic signals before the RF energy reaches the antenna.

3G3 **Recall** that a filter is a device that blocks some frequencies and passes others.

Understand the effects of low-pass, bandpass and high-pass filters.

Understand that a low-pass filter, a band-pass filter and a band stop (notch) filter can minimise the radiation of harmonics.

Recall that RF power amplifiers can produce harmonics of the wanted signals and that suitable filtering is required to avoid harmonic radiation.

A filter is a device that allows certain frequencies to pass while blocking or attenuating others. In radio systems, filters are used to control which parts of the frequency spectrum are transmitted or received, and to prevent unwanted signals from being radiated.

The cut-off frequency of a filter is the frequency at which the filter begins to significantly attenuate the signal. It is usually defined as the point where the output power has fallen by 3 dB compared to the passband level. Frequencies on the pass side of the cut-off are passed with little attenuation, while frequencies beyond the cut-off are increasingly reduced.

A low-pass filter allows frequencies below the cut-off frequency to pass by presenting a low impedance to those signals. Frequencies above the cut-off encounter a high impedance and are therefore attenuated. Low-pass filters are commonly used in transmitters to reduce or remove harmonics, which occur at frequencies higher than the wanted signal.

A high-pass filter operates in the opposite way. It allows frequencies above the cut-off frequency to pass, while attenuating frequencies below the cut-off. This type of filter is useful for suppressing unwanted low-frequency signals.

A band-pass filter allows only a specific range of frequencies around a centre frequency to pass, attenuating frequencies both above and below that range. The range between the lower and upper cut-off frequencies defines the filter's passband.

The skirt of a filter refers to the region of frequencies just beyond the cut-off, where the signal attenuation increases rapidly with frequency. A steeper skirt means the filter transitions more sharply from passing to blocking frequencies, which improves selectivity and reduces unwanted emissions close to the passband.

A filter that blocks a particular frequency or narrow range of frequencies is known as a band-stop filter, or notch filter. This is often used to suppress a specific interfering signal or harmonic without affecting nearby wanted frequencies.

RF power amplifiers can generate harmonics of the fundamental frequency due to non-linear operation. To prevent these harmonics from being radiated, transmitters use combinations of low-pass, band-pass, and band-stop filters, ensuring good spectral purity and compliance with regulatory requirements.

3G4 **Understand** that too fast a rise and fall time of the transmitted RF envelope of a CW transmitter may cause excessive bandwidth (key clicks) and that this can be minimised by suitable filters in the keying stage.

Recognise a diagrammatic representation of rise and fall time.

In a CW transmitter, the RF carrier is switched on and off using a key. The way in which the RF envelope rises when the key is pressed, and falls when the key is released, is described as the rise time and fall time of the transmitted signal.

If the rise and fall times are too fast, the RF envelope changes very abruptly. Rapid changes in amplitude contain a wide range of frequency components, which causes the transmitted signal to occupy a much wider bandwidth than intended. This results in unwanted sidebands being generated either side of the carrier frequency. These unwanted emissions are heard by other operators as sharp clicks, known as key clicks. Key clicks are therefore caused by the very fast rise time of the carrier when the key is depressed, and similarly by a rapid fall time when the key is released. The faster the rise and fall times, the wider the resulting sidebands and the greater the interference to adjacent frequencies.

To minimise key clicks, the rise and fall times of the RF envelope are deliberately smoothed using filtering in the keying stage. A common method is to place a resistor and capacitor network across or in the keying circuit. This RC network slows the rise of the RF envelope when the key is pressed, preventing sudden changes in amplitude. By following this with an inductor, the fall time is also controlled, damping rapid changes and suppressing high-frequency oscillations when the key is released.

By shaping the envelope in this way, the transmitted signal occupies a narrower bandwidth, key clicks are greatly reduced, and the CW signal becomes cleaner and less likely to cause interference.

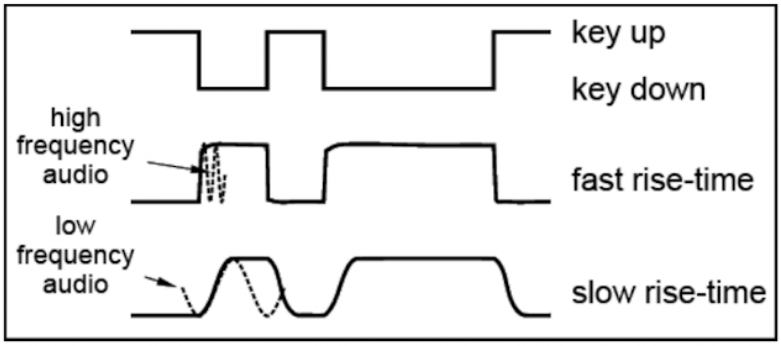

3G5 **Recall** the cause and effect of 'chirp' and identify suitable remedies.

Chirp on CW is caused by a brief, unwanted change in the transmitted frequency at the start (and sometimes end) of a Morse element. When the key is pressed, the transmitter's current demand suddenly increases. If the power supply voltage momentarily dips, or if the transmitter stages are not well isolated, the oscillator conditions change slightly (supply voltage, bias, or load), which pulls the oscillator frequency. The result is that the CW note "wobbles" or slides in pitch for an instant, and the signal is splattered slightly in frequency, making it sound rough and potentially causing interference close by.

The remedy is to stop the oscillator being "pulled" when keying. That means using a stiff, well-regulated power supply with enough current capability, and ensuring good smoothing/reservoir capacitance so the supply voltage does not dip when the key is pressed. In transmitter design terms it also means good decoupling and isolation between stages so the oscillator does not see supply or load changes, and using keying methods that avoid disturbing the oscillator (for example keying a buffer/amplifier stage or shaping the keying rather than abruptly switching conditions right at the oscillator).

Receiver concepts

3H2 **Understand** the block diagrams of the crystal diode receiver, and direct conversion receiver.

Understand the functions of the RF amplifier, demodulator (detector), and audio amplifier as used in an analogue receiver.

An analogue radio receiver is designed to select a wanted RF signal, recover the audio information carried by that signal, and amplify the audio to a usable level. Two simple receiver types that illustrate these principles well are the crystal diode receiver and the direct conversion receiver.

In a crystal diode receiver, the incoming signal from the antenna is first applied to a tuned circuit made up of an inductor and a variable capacitor. This tuned circuit acts as a band-pass filter, presenting a high impedance at the desired frequency while providing a low impedance path to ground for unwanted frequencies. As a result, only the selected RF signal is developed across the tuned circuit.

The selected RF signal is then applied to a low forward-voltage diode, typically a germanium diode. This diode acts as the demodulator (detector). It conducts on one half of the RF cycle and blocks the other, effectively removing the negative portion of the waveform. This process recovers the envelope of the RF signal, which corresponds to the original audio modulation.

The recovered audio is fed directly to a crystal earphone. The earphone is unable to respond to RF frequencies, so only the low-frequency audio variations remain audible. A small capacitor may be connected in parallel with the earphone to bypass any remaining RF or high-frequency noise, reducing hiss and improving audio quality. No RF or audio amplification stages are used in a basic crystal receiver, which is why it requires strong signals and sensitive headphones.

A direct conversion receiver operates on a different principle but achieves the same end result. In this type of receiver, the incoming RF signal is mixed directly with a signal from a local oscillator that is tuned to the same frequency as the desired signal. The mixing process produces both sum and difference frequencies. When two signals of nearly identical frequency are mixed, the difference frequency corresponds to the original audio modulation.

After mixing, a low-pass filter removes the high-frequency components, including the RF and sum-frequency products, leaving only the audio-frequency signal. This audio is then amplified and passed to headphones or a loudspeaker. Because the RF signal is converted directly to audio in a single step, this arrangement is known as direct conversion. It offers good selectivity and accurate demodulation, but requires a stable, tunable local oscillator covering the receive frequency range.

In both receiver types, the RF amplifier, where fitted, increases the strength of weak RF signals from the antenna to a level suitable for processing. The demodulator recovers the audio information from the RF carrier, and the audio amplifier boosts the recovered audio signal so it can drive headphones or a loudspeaker.

3H3 **Recall** that a receiver's ability to detect weak signals is known as its sensitivity.

Recall that very strong signals can overload a receiver and cause distortion to the audio output.

A receiver's ability to detect and process weak signals is known as its sensitivity. The more sensitive a receiver is, the weaker the signal it can receive and still produce intelligible audio. Sensitivity is therefore an important measure of receiver performance, and receivers with higher sensitivity are generally considered more desirable, particularly for weak-signal work.

However, very strong signals can cause problems in a sensitive receiver. If a strong RF signal is applied to the receiver input, the RF amplifier or subsequent stages may become overloaded. When this happens, the receiver can no longer operate in a linear manner and clipping and distortion occur. This distortion affects the audio output and may also cause unwanted signals or interference to appear.

To prevent overload, many receivers provide a means of reducing sensitivity, commonly by adjusting the RF gain. Reducing the RF gain lowers the amplification of incoming signals, allowing strong signals to be received without distortion while maintaining acceptable performance. This ability to control receiver sensitivity helps ensure clean audio and stable operation under varying signal conditions.

3H4 **Recall** that a receiver's ability to reject frequencies outside the wanted signal bandwidth is known as its selectivity.

Understand the limitations of tuned circuits in selecting wanted frequencies and the effect of the Q factor of tuned circuits.

See also Section 2H4.

A receiver's ability to reject signals on frequencies outside the wanted signal bandwidth is known as its selectivity. Good selectivity allows the receiver to isolate a desired signal while rejecting other signals on nearby frequencies, reducing interference and improving intelligibility.

When a receiver is tuned to a particular frequency, the information being received is contained in the sidebands either side of the carrier. The width of these sidebands depends on the mode of transmission being used. For example, modes carrying more audio information require wider sidebands. If the receiver bandwidth is too wide, it may pass unwanted signals on adjacent frequencies, causing interference. For this reason, receivers must have a controlled bandwidth, which defines their selectivity.

Selectivity is often described using the response curve of a tuned circuit. By convention, the signal level at the centre frequency is taken as 100%. On either side of this centre

frequency there are two points where the signal power has fallen to 50% of the maximum, which corresponds to –3 dB. These are known as the lower and upper half-power frequencies, and the difference between them is called the bandwidth or half-power bandwidth.

The sharpness of the tuned circuit response is determined by its Q factor, or quality factor. The Q factor is defined as the ratio of the centre frequency to the bandwidth between the half-power points:

$$Q = \frac{f_c}{f_u - f_l}$$

A high-Q tuned circuit has a narrow bandwidth and therefore good selectivity, making it effective at rejecting nearby unwanted signals. A low-Q circuit has a wider bandwidth, which allows more signals through but provides poorer selectivity.

In practice, simple tuned circuits have limitations. Achieving very high selectivity with a single tuned circuit is difficult, especially at lower frequencies or over wide tuning ranges. For this reason, practical receivers often use multiple tuned stages or additional filtering to achieve the required selectivity without excessive loss or instability.

Superheterodyne concepts

3I1 **Understand** the need for and advantages of the superheterodyne architecture.

Note: A diagram of the Single Conversion Superhet diagram is provided in section 4

The superheterodyne receiver architecture was developed to overcome the limitations of simpler receiver designs and to provide much improved selectivity and performance, particularly as radio bands have become increasingly crowded.

In simple receivers, such as crystal or direct conversion designs, the ability to achieve good selectivity is limited by the performance of tuned circuits operating directly at the received frequency. As frequency increases, it becomes difficult to build tuned circuits with a consistently narrow bandwidth and stable characteristics across a wide tuning range. This makes it harder to separate closely spaced signals.

The superheterodyne receiver solves this problem by converting the received RF signal to a fixed intermediate frequency (IF). This is achieved by mixing the incoming signal with a signal from a local oscillator. Once the signal has been converted to a fixed IF, the majority of the receiver's gain and selectivity can be applied at this single frequency.

The major advantage of this approach is that high-quality, high-Q filters can be designed for the fixed intermediate frequency. These filters provide excellent and consistent selectivity, allowing the receiver to reject unwanted adjacent signals far more effectively

than receivers that rely solely on RF tuning. This is especially important in modern radio environments, where efficient use of bandwidth is essential to allow many signals to coexist within limited spectrum.

As bands have become more crowded, the need to fit more signals into narrower bandwidths has made good selectivity increasingly important. The superheterodyne architecture meets this need by offering predictable, stable filtering and superior adjacent-channel rejection over a wide tuning range.

For these reasons, the superheterodyne design has become the dominant receiver architecture for most practical radio receivers, including amateur, commercial, and broadcast equipment.

3I2 **Recall** that the intermediate frequency is the sum of or difference between the RF and local oscillator frequencies and is produced by a mixer.

In a superheterodyne receiver, the intermediate frequency (IF) is produced in the mixer stage by combining the incoming RF signal with a signal from a local oscillator (LO). When two frequencies are mixed together, the output contains both the sum and the difference of those two frequencies. One of these products is deliberately chosen to be the fixed intermediate frequency.

By selecting an appropriate local oscillator frequency, the wanted RF signal is converted to the same fixed IF, regardless of which frequency is being received. Once converted to this fixed IF, the signal can be passed through a narrow, high-quality IF filter, providing excellent and consistent selectivity. The unwanted mixing product is rejected by the IF filtering.

The local oscillator is variable, and it is this variation that allows the receiver to be tuned over a wide range of RF frequencies while still using the same fixed IF filter. This ensures that receiver performance remains consistent across the entire tuning range.

For example, consider a receiver designed to cover the 40 m band (7.0–7.2 MHz) using a fixed IF of 5 MHz, and operating on the difference frequency produced by the mixer.

To receive a signal at 7.0 MHz, the local oscillator is set to 2.0 MHz:

$$7.0MHz - 2.0MHz = 5.0MHz$$

To receive a signal at 7.2 MHz, the local oscillator is set to 2.2 MHz:

$$7.2MHz - 2.2MHz = 5.0MHz$$

In this way, tuning the receiver across the band is achieved by tuning the local oscillator from 2.0 to 2.2 MHz, while the intermediate frequency remains fixed at 5 MHz. The sum

frequency produced by the mixer is removed by filtering and does not contribute to the received signal.

This ability to convert a wide range of RF frequencies to a single fixed intermediate frequency is the key reason why the superheterodyne receiver provides superior selectivity and consistent performance.

3I3 **Recall** that a superheterodyne receiver uses a fixed IF stage to enable good selectivity and that mixing ahead of the IF enables multi-band reception.

Understand that tuned circuits in RF and IF amplifiers select the wanted signal.

Identify the tuned circuits in the circuit of an IF amplifier.

A superheterodyne receiver uses a fixed intermediate frequency (IF) stage to achieve good and consistent selectivity. By converting the incoming RF signal to a fixed IF before most of the amplification and filtering takes place, the receiver can use carefully designed tuned circuits that operate at a single frequency. This makes it possible to achieve much better selectivity than would be practical if filtering were carried out directly at RF across a wide tuning range.

The use of a mixer ahead of the IF stage allows the receiver to operate on multiple bands. Signals from different RF frequencies are converted to the same fixed IF by adjusting the local oscillator frequency. In this way, the same IF amplifier and filter stages can be used regardless of the band being received, while maintaining consistent performance.

Both the RF amplifier and the IF amplifier contain tuned circuits that help select the wanted signal. The RF tuned circuits provide initial selection and help reject out-of-band signals before the mixer, reducing the likelihood of unwanted mixing products. The IF tuned circuits then provide the majority of the receiver's selectivity by sharply defining the passband at the fixed intermediate frequency.

The IF amplifier is a fixed-frequency amplifier designed to provide high gain and narrow bandwidth at the intermediate frequency. It improves receiver sensitivity by amplifying the wanted signal while rejecting signals outside the IF passband. In practice, the IF amplifier often consists of several amplifier stages in series, each containing tuned circuits, such as resonant transformer-coupled circuits or crystal or ceramic filters, centred on the IF. These tuned circuits are the key elements that define the receiver's selectivity.

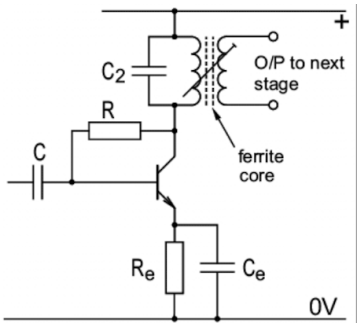

This circuit is a common-emitter transistor IF amplifier with a tuned collector load. It provides gain and selectivity at a fixed intermediate frequency. The key feature to recognise is the tuned circuit in the collector, which is what makes this an IF stage, not just a generic amplifier.

The IF signal arrives at the input coupling capacitor (C) on the left. This capacitor blocks DC but allows the IF signal to pass to the base of the transistor. The transistor amplifies the IF signal. The amplified signal appears at the collector, where it is fed into a tuned circuit consisting of an inductor and capacitor. Only signals at the IF frequency are efficiently transferred to the next stage.

The output is taken from a transformer-coupled secondary winding on the ferrite core and passed to the next IF stage or to the detector.

The inductor and capacitor C_2 form a parallel resonant (tuned) circuit in the collector.

- This tuned circuit is resonant at the intermediate frequency
- At resonance, it presents a high impedance
- This produces a large voltage swing, giving high gain at the IF
- Signals away from the IF see a lower impedance and are attenuated

This is the selectivity of the IF stage.

The ferrite core allows the inductance to be compact and stable, and the coupling to the secondary winding allows controlled transfer of energy to the next stage without loading the tuned circuit too heavily.

The secondary winding on the ferrite core is loosely coupled to the primary tuned circuit. This:

- Preserves the Q of the tuned circuit
- Prevents excessive bandwidth widening
- Provides impedance matching to the next stage

The output is labelled “O/P to next stage”, which would typically be another IF amplifier or the detector.

R provides base bias for the transistor. R_e is the emitter resistor, which stabilises the operating point and prevents thermal runaway. C_e bypasses the emitter resistor at IF frequencies, increasing AC gain while keeping DC stability. The supply rail at the top provides collector DC via the tuned circuit.

Demodulation

3K1 **Understand** how a diode detector will recover the audio from amplitude modulated signals.

Understand that to generate the audio from CW signals a beat frequency oscillator (BFO) is used; for the recovery of single sideband audio a carrier insertion oscillator (CIO) and product detector are used and for the recovery of FM audio a discriminator is used.

Identify the waveforms produced in a diode AM detector.

A diode detector is used to recover the audio from an amplitude-modulated (AM) signal by extracting the envelope of the RF waveform. An AM signal consists of a high-frequency carrier whose amplitude varies in accordance with the audio signal.

In a diode detector, the incoming AM signal is applied to a low forward-voltage diode, typically a germanium or Schottky diode. The diode conducts on one half of the RF cycle and blocks the other, effectively rectifying the signal. This produces a waveform that follows the peaks of the RF carrier rather than oscillating symmetrically about zero.

After rectification, the signal still contains RF components. These are removed by filtering, usually with a resistor-capacitor network, leaving only the envelope of the original AM signal. This envelope is a voltage-shifted version of the original audio modulation. A coupling capacitor is then used to remove the DC component, allowing only the recovered audio signal to pass to the audio amplifier.

When identifying waveforms in a diode AM detector, the stages are:

- the incoming AM RF waveform,
- the rectified RF waveform with one half removed,
- the smoothed envelope representing the audio,
- and finally the audio signal after DC blocking.

For CW reception, there is no modulation envelope to detect, as the signal consists of an unmodulated carrier that is simply switched on and off. To make CW audible, a beat frequency oscillator (BFO) is used. In a superheterodyne receiver, the BFO generates a signal at a frequency very close to the IF. When the BFO signal is mixed with the IF signal

at the detector, sum and difference frequencies are produced. The difference frequency lies in the audio range and is passed to the audio amplifier, producing the audible tone. For example, if the IF is 3.565 MHz and the BFO is set to 3.566 MHz, mixing produces:

- a sum frequency of 7.131 MHz, which is rejected, and
- a difference frequency of 1 kHz, which is amplified as audio.

For single sideband (SSB) reception, a simple diode detector cannot be used because the carrier has been suppressed. Instead, a product detector is used together with a carrier insertion oscillator (CIO). The CIO generates a replacement carrier at or near the original carrier frequency. For USB, the CIO is set slightly below the IF; for LSB, it is set slightly above. Mixing the SSB signal with the CIO restores the audio frequencies. In effect, the CIO replaces the carrier that was removed in the transmitter.

For frequency-modulated (FM) signals, audio information is contained in frequency variations, not amplitude changes. An FM receiver therefore uses a frequency discriminator, which converts small changes in frequency at the IF into corresponding changes in voltage. These voltage variations represent the original audio signal and are passed to the audio amplifier.

3L1 **Understand** that the automatic gain control (AGC) of a receiver operates by sensing the strength of the received signals at the detector and adjusting the gain of the IF and sometimes the RF amplifiers to keep the audio output level fairly constant.

Recall that the AGC signal can also drive a signal strength meter (S-meter).

Automatic Gain Control (AGC) is used in a receiver to keep the audio output level fairly constant despite large variations in the strength of the received signal. Without AGC, strong signals would produce very loud audio and weak signals would be barely audible, requiring constant manual adjustment of the receiver gain.

AGC operates by sensing the signal strength at the detector, after the RF signal has been demodulated. A control voltage is derived from this detected signal and is fed back to control the gain of the receiver's IF amplifier stages, and in some receivers also the RF amplifier.

When a strong signal is received, the detected signal level increases. The AGC control voltage then reduces the gain of the IF and RF amplifiers, preventing overload and keeping the audio output at a comfortable level. When the received signal becomes weaker, the detected signal level falls, the AGC voltage is reduced, and the amplifier gain is increased, maintaining intelligible audio.

The AGC control signal is also commonly used to drive the receiver's signal strength meter (S-meter). Because the AGC voltage is proportional to the strength of the received signal, it provides a convenient indication of signal strength for the operator.

SDR transmitters and receivers

3M1 **Recall** that SDR software uses a mathematical function called a Fourier transform which sifts the composite signal into its constituent independent frequencies for processing.

Recall that this can also be used to provide a spectrum or waterfall display.

Recall that digital filters can be much more selective than analogue filters.

In a software-defined radio (SDR), the received signal is converted to digital form by an analogue-to-digital converter (ADC). The stream of samples produced by the ADC represents the signal in the time domain, meaning it describes how the signal voltage varies with time.

To allow frequency selection and demodulation, the SDR must analyse the signal in the frequency domain, which shows the amplitude of each frequency component present in the signal. This conversion from the time domain to the frequency domain is performed using a mathematical function called a Fourier transform. The Fourier transform separates, or sifts, the composite signal into its constituent independent frequencies, allowing each frequency component to be processed individually.

The frequency-domain data produced by the Fourier transform can be displayed to the user as a spectrum, showing signal strength versus frequency. When successive spectra are displayed over time, a waterfall display is produced, allowing signals to be seen as they appear, disappear, or change in frequency.

Once the signal is in the frequency domain, the SDR can apply digital filters within the digital signal processing (DSP) stage. These filters can be much more selective than analogue filters, as they are not affected by component tolerances, ageing, or losses. Digital filters can be precisely defined in software, easily adjusted, and reused across different frequency ranges, making them both highly selective and very flexible.

Because filtering and demodulation are carried out mathematically rather than with physical components, SDRs can achieve excellent performance and versatility without the need for discrete analogue filters.

3M2 **Recall** the meaning of the time domain and the frequency domain.

Understand how signals in the time domain may also be viewed in the frequency domain.

Identify for some simple harmonic waves, the spectrum obtained using the Fourier transform.

(Waves composed of one and two Harmonics will be examined).

The time domain and the frequency domain are two different ways of viewing the same signal.

In the time domain, a signal is shown as how its amplitude varies with time. This is the most intuitive view and is what you would see on an oscilloscope. For example, a sine wave in the time domain shows repeating positive and negative voltage cycles over time.

In the frequency domain, the same signal is shown as a set of frequencies and their amplitudes, with no direct reference to time. Instead of asking "how does the signal change with time?", the frequency domain answers "what frequencies are present in this signal, and how strong are they?".

A signal that exists in the time domain can be converted into the frequency domain using a Fourier transform. This mathematical process analyses the time-domain waveform and breaks it down into its constituent sinusoidal components. Each component appears in the frequency domain as a discrete spectral line at a particular frequency, with a height corresponding to its amplitude.

For a simple harmonic wave consisting of a single sine wave, the spectrum produced by the Fourier transform contains one frequency component only. For example, a pure 5 MHz sine wave produces a single spectral line at 5 MHz. There are no harmonics present because the waveform is perfectly sinusoidal.

If a waveform is composed of two harmonics, the spectrum will contain two discrete frequency components. One will be the fundamental frequency, and the other will be a harmonic at an integer multiple of the fundamental. For example, a waveform made up of a 5 MHz sine wave and its second harmonic at 10 MHz will produce two spectral lines: a strong line at 5 MHz and a weaker line at 10 MHz. The harmonic will normally have a lower amplitude than the fundamental.

In the time domain, the combination of these harmonics produces a waveform that appears distorted compared to a pure sine wave. In the frequency domain, that same distortion is revealed as the presence of additional frequency components.

This relationship between the time domain and frequency domain is fundamental to radio systems, as it explains how waveform shape, bandwidth, harmonics, and interference are related.

3M3 **Recall** the different elements that make up the functions of an SDR (block diagram).

Section 4 – Feeders and antennas

Feeders

4A1 **Understand** the equal and opposite currents flowing in a balanced feeder cause equal and opposite fields around the two conductors.

Understand that these fields cancel out, but that nearby objects can cause an imbalance that makes the feeder radiate RF energy.

Recall that a rectangular waveguide must have its larger dimension greater than λ/2 for the signal to travel.

In a balanced feeder, such as twin feeder or ladder line, the two conductors carry equal currents flowing in opposite directions. Each conductor produces an electromagnetic field, but because the currents are equal and opposite, the fields are also equal and opposite. These fields cancel each other out, so ideally the feeder does not radiate RF energy.

The same cancellation principle applies to coaxial cable, although the construction is different. In coaxial cable, the forward current flows on the outer surface of the centre conductor, while the return current flows on the inner surface of the outer braid. Because these currents are equal and opposite and confined within the cable, their fields cancel and the cable does not normally radiate.

However, nearby objects such as metalwork, the ground, or an asymmetrical antenna connection can disturb this balance. When the currents are no longer equal and opposite, common-mode current can flow on the outside of the braid. This causes the feeder to radiate RF energy and can lead to interference, distortion of the radiation pattern, and RF in the shack.

Balanced feeders also have good noise immunity. Any external interference that affects both conductors equally is cancelled, because the receiver responds only to the difference in voltage between the two conductors. If interference affects only one conductor, the balance is lost and unwanted currents may be induced.

At microwave frequencies, conventional cables become very lossy, so waveguides are used instead. A rectangular waveguide will only support propagation if its largest internal dimension is greater than half the wavelength (λ/2) of the signal. If this condition is not met, the signal cannot propagate along the waveguide.

4A2 **Recall** that twin feeder usually has lower loss than coaxial cable.

Recall that loss is measured in dB.

Understand the relationship between RF output power, feeder loss and power delivered to the antenna.

Calculate the unknown quantity given the other two.

Feeder loss will be in multiples of 3dB and 10dB.

All feeder cables cause some attenuation of the RF signal. This attenuation is known as signal loss. Signal loss is directly proportional to the length of the feeder cable and is frequency dependent. As frequency increases, loss generally increases. Different types of feeder exhibit different losses per metre.

Twin feeder (ladder line) usually has lower loss per metre than coaxial cable, particularly at HF, which is why it is often preferred where practical.

Signal loss is measured in decibels (dB). Decibels are a logarithmic unit, not a direct measure of power. Common loss values used in the exam are multiples of 3 dB and 10 dB:

- 3 dB ≈ half the power
- 6 dB ≈ one quarter of the power
- 10 dB ≈ one tenth of the power

Total feeder loss is calculated by multiplying the loss per metre by the length of the feeder.

The power delivered to the antenna depends on:

- The transmitter RF output power
- The total feeder loss in dB

To calculate the power at the antenna, the transmitter power is multiplied by the feeder loss converted from dB into a linear power ratio.

Example (3 dB steps)

A transmitter outputs 100 W into a feeder that is 2 m long with a loss of 3 dB per metre.

- Total loss = 2 × 3 dB = 6 dB
- 6 dB ≈ one quarter of the power

100W × 0.25 = 25W

Power delivered to the antenna = 25 W

Example (7 dB using known values)

A transmitter outputs 100 W and the feeder loss is 7 dB.

Break the loss into known parts:

- 10 dB → divide by 10

100W → 10W

- 3 dB → double (because 7 dB = 10 dB − 3 dB)

10W × 2 = 20W

Power delivered to the antenna = 20 W

For unusual values (e.g. 5 dB), a scientific calculator can be used to check your working. The formula is:

$$Power\ Ratio = 10^{\left(-\frac{dB}{10}\right)}$$

Example: 5 dB loss from a 100 W transmitter

- $10^{-0.5} = 0.316$
- 100 × 0.316 = 31.6W

Power delivered to the antenna ≈ 32 W

This method gives a precise result and confirms the accuracy of the 3 dB / 10 dB approximation method.

4A3 **Recall** that feeders have a characteristic impedance which depends upon the diameter and spacing of the conductors.

Recall that this impedance determines the ratio of the RF RMS potential difference to the RF, RMS current in a correctly terminated feeder.

Recall that for amateur use 50Ω coaxial feeder is normally used; that coaxial cable for TV and satellite receivers has a different impedance of 75Ω.

Recall that balanced feeder is commonly available from 75Ω to 600Ω.

Recall that correctly terminated means correctly connected with a resistive load equal to the cable characteristic impedance.

All feeder cables have a characteristic impedance. This impedance is determined by the diameter of the conductors, the spacing between them, and the dielectric material used in the cable construction.

Because feeder cables have resistance, inductance, and capacitance, they also have a reactive component. The combined effect of resistance and reactance gives the feeder its characteristic impedance.

Importantly, the characteristic impedance is the same at any point along the cable and does not depend on the length of the feeder.

The characteristic impedance of a feeder determines the ratio of RF RMS voltage to RF RMS current when the feeder is correctly terminated.

A feeder is said to be correctly terminated when it is connected to a purely resistive load equal to the feeder's characteristic impedance. Under these conditions, maximum power transfer occurs and reflections are minimised.

50 Ω coaxial cable is normally used for amateur radio

- Most amateur transceivers are designed for 50 Ω
- Matching the transceiver to a 50 Ω feeder allows maximum RF current and efficient power transfer

75 Ω coaxial cable is commonly used for:

- Television antennas
- Satellite receivers
- Although 75 Ω coax is not standard for amateur radio, it may be useful in some specific antenna systems.

Balanced feeder (ladder line or open wire feeder) is commonly available with characteristic impedances ranging from 75 Ω to 600 Ω. The most common values used in amateur radio are 300 Ω and 450 Ω. Balanced feeder generally has lower loss per metre than coaxial cable, particularly at HF.

Since the characteristic impedance depends on the inductance and capacitance of the feeder changing the diameter of the conductors, or changing the spacing between the conductors will change the characteristic impedance of the cable. This is why the physical construction of the feeder is critical.

For an antenna system to be correctly terminated, the following should all have the same impedance the transceiver, the feeder cable and the antenna. If there is an impedance mismatch between any of these components, power transfer is reduced and reflections may occur. In such cases, it may be necessary to use a matching device, such as an antenna matching unit (ATU), or a balun or matching transformer, particularly when interfacing between balanced and unbalanced systems.

Baluns

4B1 **Recall** the construction and use of choke type baluns.

A choke type balun is used to prevent unwanted common-mode currents flowing on the outside of a coaxial feeder. These currents can cause the feeder itself to radiate, distort the antenna radiation pattern, and introduce RF interference into the shack. A choke balun works by presenting a high impedance to these unwanted RF currents while allowing the wanted signal inside the coax to pass normally.

Choke baluns can be constructed in several different ways. One common method, often referred to as the "ugly balun", involves winding several turns of coaxial cable into a coil around a non-conductive former such as a plastic pipe. This coiled section of coax acts as an inductor, which opposes the flow of AC common-mode currents along the outside of the cable.

Another common construction method uses ferrite materials. The coaxial cable may be passed through one or more ferrite rings, looped several times through a ferrite core, or fitted with clip-on ferrite shells. The ferrite material increases the inductance of the choke, making it more effective, particularly at lower frequencies. Ferrite rings are widely used because they are very effective at suppressing common-mode currents over a broad range of frequencies.

Choke baluns are typically used when connecting an unbalanced feeder, such as coaxial cable, to a balanced antenna. By reducing common-mode currents, they help to ensure that the antenna system behaves as intended, improves RF efficiency, and reduces unwanted radiation from the feeder.

Antenna concepts

4C2 **Understand** the front-to-back ratio of an antenna.

Understand the beam width of an antenna.

Understand that radiation patterns exist in three dimensions.

For directional antennas, such as a Yagi-Uda antenna, performance is often described using terms that relate to how RF energy is distributed in space. Two important measures are the front-to-back ratio and the beam width of the antenna.

The front-to-back ratio describes how much RF energy is radiated in the forward, or wanted, direction compared with the amount radiated in the opposite direction. It is expressed as a ratio in decibels (dB). A high front-to-back ratio indicates that the

antenna radiates significantly more energy forwards than backwards, which is desirable when trying to reduce interference from stations behind the antenna or limit unwanted radiation in that direction.

The beam width of an antenna is a measure of how wide the main radiation lobe is. It is defined as the angle, usually measured in the horizontal plane, between the two points on the main lobe where the radiated power has fallen to half its maximum value, which corresponds to –3 dB. A narrow beam width indicates a more sharply focused antenna, while a wider beam width indicates broader coverage.

Although antenna radiation patterns are often shown as two-dimensional diagrams, the actual radiation from an antenna exists in three dimensions. The vertical radiation pattern may vary with direction and is influenced by factors such as the height of the antenna above ground and the effect of the ground itself. As a result, the radiation pattern is not necessarily the same through 360 degrees, particularly in the vertical plane.

4C4 **Recall** that an isotropic radiator is a theoretical antenna that radiates equally in all directions.

Recall the Effective Isotropic Radiated Power (EIRP) is based on an isotropic antenna reference rather than a dipole and is expressed in dBi.

Recall that a half-wave dipole has a gain, in its optimum direction, of 2.15dBi

An isotropic radiator is a purely theoretical antenna that radiates RF energy equally in all directions, forming a perfect spherical radiation pattern. It is not affected by ground effects and has no directionality. Such an antenna cannot exist in practice, but it is extremely useful as a reference standard against which real antennas can be compared. By definition, an isotropic radiator has a gain of 0 dB.

Because real antennas concentrate energy more in some directions than others, their performance can be expressed relative to this isotropic reference. When antenna gain is referenced to an isotropic radiator, it is expressed as dBi, and the resulting figure is used to calculate the Effective Isotropic Radiated Power (EIRP). EIRP represents the power that would need to be radiated by an isotropic antenna to produce the same field strength in the direction of maximum radiation as the real antenna.

A half-wave dipole is not isotropic, as it exhibits a small amount of directionality. Its maximum radiation occurs in directions perpendicular to the antenna, at right angles to the element, with nulls off the ends. In this optimum direction, a half-wave dipole has a gain of 2.15 dBi when compared to an isotropic radiator.

Sometimes antenna gain is expressed relative to a half-wave dipole instead of an isotropic antenna. In this case, the gain is expressed in dBd. Because a half-wave dipole already has 2.15 dB of gain over an isotropic radiator, a gain expressed in dBd will always be 2.15 dB lower than the same gain expressed in dBi.

To calculate Effective Isotropic Radiated Power (EIRP), the antenna gain must be referenced to an isotropic radiator, which means it must be expressed in dBi. If the antenna gain is given in dBd, it must first be converted.

Consider an antenna with a gain of 6 dBd. A half-wave dipole has a gain of 2.15 dBi, so to convert from dBd to dBi, 2.15 dB is added:

$$6dBd + 2.15 = 8.15\ dBi$$

Now assume the transmitter output power is 100 W and feeder losses are negligible. To calculate the EIRP, the transmitter power is multiplied by the antenna gain converted into the linear domain.

First, convert the gain in dBi into a power ratio:

$$10^{\frac{8.15}{10}} = 6.54$$

Now multiply this by the transmitter power:

$$100 \times 6.54 = 654W$$

The Effective Isotropic Radiated Power is therefore approximately 650 W.

This means that, in the direction of maximum radiation, the antenna system produces the same field strength as an isotropic antenna radiating about 650 W, even though the transmitter itself is only delivering 100 W.

4C5 **Recall** that the angle at which the radio wave leaves the antenna is known as the angle of radiation and that longer distances normally requires a lower angle of radiation.

Recall the effect of the ground on the angle of radiation.

The angle of radiation is the angle between the direction of maximum radiation from the antenna and the ground, measured in the vertical plane. It describes the direction at which radio waves leave the antenna.

For HF frequencies, the angle of radiation has a significant effect on communication range. A lower angle of radiation results in the radio wave travelling further before being refracted back towards the Earth by the ionosphere, which in turn allows greater communication distances to be achieved. Conversely, a higher angle of radiation causes the signal to return to Earth more quickly, limiting the distance covered.

The ground has a strong influence on the angle of radiation. The height of the antenna above ground affects the shape of the vertical radiation pattern. When an antenna is

positioned close to the ground, ground reflections combine with the direct radiation in such a way that the angle of radiation increases. As the antenna is raised higher above the ground, the main lobe of radiation is lowered, producing a lower angle of radiation and improving long-distance propagation.

4C6 **Recall** that the current flowing into an antenna is related to the feed point impedance and the potential difference of the applied signal.

Recall that an antenna will only present the correct feed point impedance when fed with the frequency for which it is designed.

Recall that a centre fed half-wave dipole has a feed point impedance of 73Ω in free space and that under practical conditions (e.g. due to ground proximity effects) this will be approximately 50Ω when used at its designed frequency.

The current flowing into an antenna depends on both the feed point impedance of the antenna and the potential difference of the applied RF signal. For a given applied voltage, a lower feed point impedance will result in a higher current, while a higher impedance will result in a lower current.

An antenna does not present a fixed impedance at all frequencies. Because an antenna has resistive, inductive, and capacitive components determined by its physical construction, its feed point impedance varies with frequency. An antenna will only present its correct feed point impedance when it is operated at, or very close to, the frequency for which it is designed and resonant.

A centre-fed half-wave dipole has a feed point impedance of approximately 73 Ω in free space at its resonant frequency. In practical installations, the presence of the ground affects the antenna's impedance. Ground proximity alters the distribution of currents and fields around the antenna, reducing the feed point impedance. As a result, when a half-wave dipole is installed at a realistic height above ground and used at its designed frequency, its feed point impedance is typically close to 50 Ω, which provides a good match to standard amateur radio transmitters and 50 Ω coaxial feeder.

4D1 **Recall** that a three-element Yagi has a half-wave driven element, a reflector that is slightly longer than the driven element and a director that is slightly shorter than the driven element.

Recall that Yagi antennas may have more than one director.

A Yagi-Uda antenna is a directional antenna based on a half-wave dipole driven element, with additional unconnected metallic elements used to control and focus the

radiation pattern. These additional elements shape the beam of RF energy, increasing radiation in the wanted direction and reducing it in others.

In a three-element Yagi, the driven element is accompanied by two parasitic elements. Behind the driven element is a reflector, which is made slightly longer than the driven element. Its purpose is to reflect RF energy back toward the forward direction, reducing radiation behind the antenna and improving the front-to-back ratio. In front of the driven element is a director, which is slightly shorter than the driven element. The director focuses the RF energy in the forward direction, producing a more concentrated beam.

Yagi antennas are not limited to a single director. Multiple directors may be added in front of the driven element to further increase forward gain and narrow the beamwidth. As additional directors are added, the antenna becomes more directional, although at the expense of increased physical size and reduced bandwidth.

At a minimum, a Yagi antenna requires a driven element and a reflector to produce a directional radiation pattern. Adding one or more directors enhances the antenna's ability to focus energy in the desired direction.

4D2 **Recall** that an antenna trap is a parallel tuned circuit and understand how it enables a single antenna to be resonant and have an acceptable feed-point impedance on more than one frequency.

Recall that this technique may be extended to multielement antennas such as Yagis.

An antenna trap is a parallel tuned circuit, made from an inductor and a capacitor, and is placed at one or more points along an antenna element. It behaves as a frequency-selective low-pass circuit, allowing lower-frequency signals to pass while presenting a high impedance to higher-frequency signals. This enables a single antenna to be resonant on more than one frequency while maintaining an acceptable feed-point impedance.

At its tuned (higher) frequency, the trap presents a high impedance. When a high-frequency signal reaches the trap, it is effectively blocked, causing RF current to flow and radiate only along the section of the antenna between the feed point and the trap. This section is cut to be resonant at that higher frequency.

At lower frequencies, the trap behaves as a low-pass circuit and presents a low impedance, allowing RF current to pass through it. The lower-frequency signal therefore continues beyond the trap and radiates a longer length of the antenna, from the feed point through the trap to the next trap or to the end of the element. This longer electrical length is chosen to be resonant at the lower operating frequency.

By placing traps at appropriate points along the antenna, a multiband antenna can be constructed using a single physical element, with the overall length determined by the lowest desired frequency. The same principle is commonly applied to the driven element of Yagi-Uda antennas, allowing multi-band operation without changing the antenna's physical size.

4E1 **Understand** that the signal reflected back down the feeder will combine with the waves travelling up the feeder from the transmitter leading to the formation of standing waves.

Recall that both forward and reflected signals are subjected to feeder loss.

Recall that the reflected signal will change the input impedance of the feeder so that it is no longer the characteristic impedance and the feeder will not then present the correct impedance to the transmitter.

When an antenna is not correctly matched to the feeder and transmitter impedance, not all of the RF power delivered to the feeder can be absorbed by the antenna. The excess energy is reflected back down the feeder towards the transmitter. This reflected wave travels in the opposite direction to the forward wave from the transmitter.

The forward and reflected waves combine along the length of the feeder. Because these waves are travelling in opposite directions, their interaction produces a pattern of voltage and current maxima and minima known as standing waves. This standing-wave pattern is fixed in space for a given frequency and feeder length.

Both the forward signal travelling from the transmitter to the antenna and the reflected signal travelling back towards the transmitter are subject to feeder loss. As the reflected signal travels along the feeder, some of its energy is dissipated as heat in the feeder, in the same way as normal feeder attenuation. This is why a mismatched system can result in additional losses.

The presence of a reflected signal means that the input impedance of the feeder is no longer equal to its characteristic impedance. Instead, the impedance seen at the transmitter end depends on the magnitude of the reflection and the electrical length of the feeder. As a result, the feeder no longer presents the correct impedance to the transmitter.

If the mismatch is severe, the impedance presented to the transmitter can move far from its design value. Modern transmitters will usually reduce power or shut down to protect themselves, but in poorly protected or older equipment, this condition can potentially cause overheating or damage to the transmitter output stage.

4F1 **Recall** that a transmitter is designed to transfer energy into a specific impedance.

Understand that an antenna matching unit (AMU) can change the impedance presented to the transmitter and that an AMU does not tune the feeder or the antenna to resonance.

Understand that if the AMU is located at the transmitter, it will have no effect on the actual SWR on the feeder between the AMU and antenna.

A transmitter is designed to transfer RF energy efficiently into a specific load impedance, which for amateur radio equipment is typically 50 Ω. When the impedance presented to the transmitter differs from this value, efficient power transfer no longer occurs and some of the transmitted energy is reflected back towards the transmitter.

An antenna matching unit (AMU) is a network of inductive and capacitive components arranged as tuned circuits. By switching these components in and out of circuit, the AMU can transform the impedance presented to the transmitter, making it appear close to the transmitter's design impedance. This allows the transmitter to operate safely and deliver power without excessive reflected energy.

It is important to understand that an AMU does not tune the antenna or the feeder to resonance. It does not remove standing waves on the feeder, nor does it eliminate losses caused by a mismatch between the antenna and the feeder. If the antenna is poorly matched at the operating frequency, it will still radiate inefficiently regardless of the presence of an AMU. The primary purpose of the AMU is therefore to protect the transmitter, not to improve antenna efficiency.

The standing wave ratio (SWR) is a measure of how well an impedance is matched at a particular point in the system. When an AMU is placed at the transmitter, it changes the impedance seen by the transmitter so that it appears close to 50 Ω. As a result, the transmitter measures a low (good) SWR at its output.

However, the AMU does not change the impedance of the antenna, nor does it remove standing waves on the feeder between the AMU and the antenna. If the antenna is mismatched, the feeder will still carry both forward and reflected waves, and the actual SWR at the antenna remains high. Feeder loss may reduce the magnitude of the reflected wave before it returns to the transmitter, which can further mask the true SWR at the antenna. This is why a system can show a good SWR at the transmitter while still being poorly matched at the antenna.

When an AMU is located at or near the antenna feed point, it matches the antenna impedance before the signal enters the feeder. In this case, the feeder operates close to its characteristic impedance, standing waves are greatly reduced, and feeder losses

are minimised. This results in a more efficient system, particularly when the antenna itself is significantly mismatched.

In both cases, the AMU performs impedance transformation only and does not alter the resonant frequency of the antenna. The key distinction is that a shack-mounted AMU protects the transmitter, while a feed-point-mounted AMU improves overall system efficiency by reducing mismatch on the feeder.

Plugs and Sockets

4G1 **Recall** that in a correctly connected and terminated coaxial cable the RF field only exists within the cable and is not affected by objects outside the cable.

Note that correctly connected means screen and inner conductor continuity through any plug and socket.

In a correctly connected and correctly terminated coaxial cable, the RF electromagnetic field exists only within the cable, in the dielectric between the inner conductor and the outer screen. Because the outer conductor completely surrounds the inner conductor, the RF field is contained within the cable and is effectively shielded from external influences.

As a result, the RF signal carried by a coaxial cable is not affected by nearby objects, such as metalwork or other cables, provided the coax is intact and properly terminated.

Correctly connected means that there is continuous electrical connection of both the inner conductor and the outer screen through any plugs, sockets, or connectors in the feeder. If either the screen or inner conductor continuity is broken, or if the termination is incorrect, RF currents may flow on the outside of the cable and the feeder may become susceptible to external effects.

Section 5 – Propagation

Radio propagation: key concepts

5A2 **Understand** the meaning of ground wave, tropospheric (space) wave, sky wave, skip distance and skip zone (dead zone).

Understand why the ground wave has a limited range due to absorption of energy in the ground and that the loss increases with increasing frequency.

Radio waves can propagate by three methods: ground wave, sky wave and tropospheric (space) wave. A ground wave travels along the surface of the Earth and gradually bends back down towards it. Its range is limited because energy is absorbed by the ground, and this loss increases as the frequency increases. A sky wave signal is refracted (commonly said incorrectly as reflected) by the ionosphere before returning to Earth. Factors which will influence the distance the signal will travel are frequency, state of the ionosphere, time of day, angle at which the radio waves enter the ionosphere. There are three factors that determine the angle of refraction: the degree of ionisation, the frequency of the wave and the angle at which the RF signal enters the ionosphere. The higher the ionisation the greater the bending ability. The higher the frequency the harder it is for the wave to bend. The higher the angle that the RF wave enters the ionosphere the greater the bend required to go shorter distances. If the angle is too steep it may pass straight through the ionosphere. The distance between the transmitter and the closest point when the refracted signal returns to Earth is known as the skip distance. Once the refracted wave has returned to the Earth it may bounce again and start a second hop. A tropospheric or space wave is a radio wave that travels in a straight line through the lower atmosphere and is limited by the radio horizon. It includes the direct wave from the transmitter and the wave reflected from the ground. Space waves are generally VHF or higher frequencies.

Where the distance is greater than the reach of the ground wave, and is less than the first hop of the sky wave the signal will not be received. This is known as the skip zone or dead zone.

5A3 **Recall** that electromagnetic radiation comprises both an electrical field and a magnetic field.

Recall that the two fields are always at right angles to each other and that the direction of propagation is at right-angles to both fields.

Recall that it is the plane of polarisation of the electric field that defines the polarisation of the electromagnetic wave

Radio waves are a type of electromagnetic radiation. Each type of electromagnetic radiation has two fields which are at right angles to each other: an electric field (E) and a magnetic field (H). It is the electric field of a wave that defines its polarisation. The electric field will be produced in the same plane as the antenna elements. The direction of propagation is at right angles to both the electric and magnetic fields. Polarisation is less of a concern with HF frequencies since the effect of refraction is unpredictable. At VHF and UHF frequencies, vertical polarisation is normally used. Significant loss of signal strength will occur where signals are cross polarised.

Ionosphere

5B1 **Understand** that the ionosphere comprises layers of ionised gases and that the ionisation is caused by solar emissions including ultraviolet radiation and charged solar particles.

Recall the ionospheric layers (D, E, F1 and F2) and approximate heights.

Electromagnetic radiation, from the Sun, causes the molecules in the high altitude air of the atmosphere to become ionised. The radiation that causes this is mostly ultra-violet but also solar particles, ejected by the Sun, cause the molecules to split, which in turn leads to them forming ions.

The D layer extends from around 60km to 90km. The E layer from 100 to 125km. During the day when the Earth faces the Sun, there are two F layers: F1, and F2. The F1 layer is about 300km and the F2 layer is at about 400km. At night the F1 and F2 layer layers combine into a single F layer. The F layer is found at about 250km to 300km high.

5B2 **Recall** that the level of ionisation changes with the time of day, the time of year, and according to the, approximately, 11-year sunspot cycle.

Understand that the sunspot number is an indicator of solar activity and that more sunspots give better HF propagation as a result of increased ionisation.

Recall that the highest frequency that will be refracted over a given path is known as the maximum usable frequency (MUF).

During summer the ionosphere is more strongly ionised because the Sun is higher in the sky and the days are longer, so the upper atmosphere receives more solar radiation. This leads to greater activity in the ionosphere and therefore increases the likelihood of refraction of RF. In winter ionisation is greatest during daylight hours and falls at night as ions recombine into neutral atoms. Sunspot activity also plays a significant role in RF propagation. Greater sunspot activity leads to an increase in solar activity which in turn causes ionisation in the ionosphere. This increase will generally improve HF propagation. It has been observed that the maximum number of sunspots occur on an approximately eleven year cycle.

As the frequency increases then the waves are less likely to be refracted. The maximum frequency that will be refracted is known as the maximum usable frequency (MUF) and it will vary as the ionospheric conditions change.

5B3 **Recall** that the F2 layer provides the furthest refractions for HF signals (about 4000km) and that the F layers combine at night.

Recall that multiple hops permit worldwide propagation.

Understand how fading occurs and its effect on the received signal.

Recall that Short Path ionospheric propagation of HF signals is the most direct route around the earth.

Recall that Long Path ionospheric propagation is where HF signals are received via the opposite route around the earth to the Short Path.

Worldwide propagation requires several hops of the RF signal between the Earth and the ionosphere. These hops will be greatest in the F2 layer which can be around 4000km in distance. The F2 layer is only available during daylight hours when F1 and F2 layers are present. At night the F1 and F2 layers combine to form a single F layer, which continues to refract HF radio waves, however it will not match the distances of the F2 layer. There are two possibilities for the path a signal may take from a transmitter to a receiver. The short path is the most direct path between two points of the globe, this follows the Great Circle path. However, signals may also follow the longer route around the Earth between two points. This is known as the long path. Generally the path chosen by the signal will follow the route that is in daylight due to the availability of the F2 layer. Where two propagation paths interfere with each other the signals may arrive in or out of phase with each other. If the signals are out of phase they may start to cancel each other out and therefore the signal will fade. Likewise, the closer they are to being in phase the signal will get stronger. This effect is known as fading.

5B4 **Recall** that the D layer tends to absorb the lower radio frequencies during daylight hours and that it tends to disappear at night.

Recall that the lowest frequency that can pass through the D-layer without significant absorption is the lowest usable frequency (LUF).

Understand that if the D-layer absorption (LUF) occurs at frequencies higher than the MUF then no ionospheric propagation can occur.

The D layer is the lowest layer in the atmosphere. When ionised it tends to absorb radio waves rather than refract them. This is caused by the molecules being closer together in the denser air. This is most apparent on frequencies below 6MHz where waves will therefore be limited to ground wave propagation. The lowest frequency that can pass through the D layer is known as the lowest usable frequency or LUF. The D layer quickly disappears at night when radiation from the Sun is no longer present. This means that radio waves can reach the E and F layers, where in turn they can be refracted and gain sky wave propagation. As a result lower frequencies are more suitable for long distance contacts during the winter months.

It is possible that the D-layer absorption increases so that the LUF rises above the MUF. In this circumstance no ionospheric propagation can occur in the HF bands.

5B5 **Recall** that in addition to VHF, waves in the in the 24 MHz and 28 MHz upper HF band can also occasionally be significantly increased by refraction from highly ionised areas in the E layer (Sporadic E).

Recall that the height of the E layer will support a single hop of up to about 2000km and that multi-hop propagation can occur.

The E layer does not usually support long-distance HF propagation, however the 12m and 10m bands, as well as lower VHF bands (below 150MHz) can be subject to a form of propagation known as sporadic-E. Sporadic-E is most common in the summertime and is very difficult to predict. It also does not give a stable or reliable signal path so contacts must be made quickly when this occurs. Multiple hops are possible, however since the layer is lower than the F layer the signals will not be refracted as far. A single E layer hop can yield distances up to 2000km. The E layer is very weak at night.

VHF and above

5C3 **Recall** that at VHF and above, multipath propagation can occur where signals are

reflected off objects (such as a buildings or aircraft) and the reflected signal is received in addition to the direct, un-reflected, signal.

HF frequencies and below tend to pass through buildings and objects. VHF frequencies and above however tend to reflect off objects. It is possible for a receiver to receive the main signal and also a later reflected signal. Where this occurs we term this multipath propagation and it is generally unwanted. Multipath propagation can cause fading and distortion because the direct and reflected signals may arrive out of phase and interfere with each other.

Section 6 – Electro magnetic compatibility (EMC)

EMC concepts

6A1 **Understand** that all electronic equipment is capable of radiating and absorbing radio frequency energy.

Recall that the basic principle of electromagnetic compatibility is that apparatus should be able to function satisfactorily in its electromagnetic environment and without causing undue electromagnetic disturbance to other apparatus in that environment

All electronic equipment relies on electromagnetic energy for its operation and is therefore capable, to some extent, of both radiating and absorbing radio-frequency energy. It is therefore important that electronic devices minimise the amount of RF energy they radiate so as not to cause interference to other equipment. This can be achieved through good circuit design, appropriate enclosure design, and effective screening.

However, a device may be required to operate in an environment where significant electromagnetic energy is present from external sources. For this reason, equipment must also be designed to continue to function correctly when subjected to external electromagnetic fields. This ability is known as immunity.

Ensuring that equipment both minimises unwanted emissions and has sufficient immunity to external interference are the core principles of electromagnetic compatibility (EMC).

6A2 **Recall** that the immunity of a device can often be improved by screening and filtering power, signal and control leads

If a device is suffering from EMC issues it can be helpful to increase its immunity. Keeping RF cables away from other cables is one way to minimise interference. Cables carrying analogue signals, for instance microphone or speaker cables, may benefit from using high quality, properly terminated, screened cables. Adding ferrite chokes to cables will also increase immunity by reducing unwanted RF currents.

Power leads and mains cables can act as unintended paths for RF to enter equipment. A simple way to prove this would be to run the transceiver from a battery in order to remove mains borne interference, or to check if the interference is still present when using a dummy load as an antenna. Using a dummy load instead of an antenna can help determine whether radiated energy from the antenna is the cause of the interference.

To prevent RF from entering or leaving equipment via the mains supply, fitting ferrite rings or clip-on ferrites around power leads, as close to the equipment as possible, can be effective.

6A3 **Understand** that transmitters in domestic environments may give rise to RF fields stronger than the agreed limits.

Understand that transmitters in domestic environments are not normal situations and special measures may have to be taken.

Transmitters operating in domestic environments may produce RF fields that are stronger than the agreed exposure limits because people may be located close to the antenna. Domestic environments are not normal operating environments for radio transmitters, and special measures may therefore be required.

Antennas should be positioned as far away from houses as practicable, and this becomes increasingly important at higher transmitter power levels, as stronger RF fields are produced. In a domestic setting it may be difficult to maintain the required separation distance between radiating antennas and members of the general public.

As a result, the licensee must ensure that EMF exposure limits are complied with and may need to reduce transmitter power, reposition antennas, or take other measures to ensure compliance.

6A4 **Understand** that new electronic equipment should meet the British Standards Institute immunity requirements but that existing equipment and poorly installed equipment may not.

New electronic equipment is designed to meet British Standards Institute (BSI) electromagnetic compatibility (EMC) immunity standards. These standards require that electronic apparatus should function satisfactorily in its intended environment and should not cause undue electromagnetic interference to other equipment.

This means that equipment should not only limit the interference it produces, but should also have a reasonable level of immunity to interference from external sources.

However, these standards do not require older equipment to be upgraded to meet current immunity requirements. As a result, older equipment, or equipment that is poorly installed, may be more susceptible to electromagnetic interference or may cause interference to other devices.

Sources of interference and their effects

6B1 **Recall** that speech transmissions, particularly AM and SSB may cause speech like sounds in analogue radio, audio systems and telephones.

Recall that FM transmission is more likely to mute or reduce the volume of the wanted signals (audio or RF).

Speech transmissions, particularly AM and SSB, can sometimes be heard as speech-like sounds in nearby analogue radio, audio equipment, or telephone systems. This occurs because AM and SSB signals contain audio information as variations of the RF signal. If such RF signals are unintentionally picked up by poorly screened or non-linear electronic circuits, they can be demodulated unintentionally, producing audible speech. Components such as semiconductor junctions, corroded contacts, or inadequately filtered audio circuits can act as unintended detectors, allowing the speech modulation to be recovered.

In contrast, FM transmissions are much less likely to produce audible interference of this type. In FM, the audio information is carried as frequency variations, not amplitude changes. Unintentional demodulation in external equipment is therefore unlikely. Instead, if a strong FM signal is picked up by unintended circuits, it is more likely to cause muting or a reduction in the volume of the wanted signal, rather than intelligible speech. This is because FM receivers and circuits typically reject amplitude variations, and strong off-frequency signals tend to desensitise or overload stages rather than demodulate cleanly.

6B2 **Recall** non-radio sources of interference and their effects:

- Arcing thermostats
- Vehicle ignition systems
- Electric Motors
- Computers and peripherals
- Switch mode power supplies
- Plasma TVs
- Very high bit rate digital subscriber line
- (VDSL) equipment
- LED lighting
- Solar photovoltaic (PV) inverters

Recall that this gives rise to various buzzing sounds on analogue radio receivers which can correlate with the nature and use of the interference source e.g. bursts of undesirable sounds when a thermostat opens or closes

Many sources of radio interference are non-radio devices that unintentionally generate RF energy as a by-product of their operation. This unwanted RF can be picked up by radio receivers, particularly analogue receivers, where it is often heard as buzzing, clicking, or rasping sounds. The character of the interference frequently correlates with how the source operates.

Arcing thermostats are a common source of interference. When the contacts open or close, small electrical arcs are produced, generating short bursts of broadband RF noise. On a radio receiver, this is often heard as sharp clicks or bursts of noise, occurring intermittently as the thermostat switches.

Vehicle ignition systems generate interference due to the high-voltage sparks produced at the spark plugs. These sparks generate broadband RF noise, which is typically heard as a regular clicking or buzzing that changes with engine speed. As the engine revs increase, the repetition rate of the interference increases.

Electric motors, particularly those using brushes, can produce RF noise due to sparking at the commutator. This interference is often heard as a harsh buzzing or whining sound, which may vary as the motor speed or load changes.

Computers and their peripherals can generate interference from high-speed digital circuits and internal clocks. This often appears as steady or repetitive buzzing, sometimes accompanied by tones related to processor or data activity.

Switch-mode power supplies are a major source of interference. They operate by rapidly switching currents at high frequencies, producing RF noise that can be radiated or conducted along power leads. On a receiver, this is commonly heard as a broadband buzz or whine, sometimes with a distinct pitch.

Plasma televisions generate RF noise due to the high voltages and fast switching used to drive the display. This interference is often broadband and can produce a strong buzzing sound across a wide range of frequencies.

Very high bit rate digital subscriber line (VDSL) equipment uses wideband signals on telephone lines. These signals can radiate from poorly balanced wiring and be received as wideband noise or buzzing, particularly on HF bands.

LED lighting frequently uses internal switch-mode drivers. Poorly filtered LED lamps can generate RF interference, often heard as a buzz or rasp, which may change when lights are switched on or dimmed.

Solar photovoltaic (PV) inverters convert DC from solar panels into AC using high-frequency switching techniques. This can generate significant RF interference, often

heard as a persistent broadband noise when the inverter is operating, which may vary with sunlight levels.

In all cases, these interference sources can produce characteristic sounds on analogue receivers, and the timing or pattern of the noise often correlates with the operation of the device, such as bursts when a thermostat switches or continuous buzzing from electronic equipment.

6B3 **Recall** that interference to Digital Audio Broadcasting (DAB) may cause loss of signal (muted audio) and to digital televisions may cause the picture to freeze, appear to pixelate; that is break up into larger squares, become jerky or disappear.

Digital broadcasting systems, such as Digital Audio Broadcasting (DAB) and digital television, behave differently from analogue systems when affected by interference.

In DAB receivers, interference or a weak signal does not usually produce a gradual increase in noise. Instead, once the signal quality falls below a usable threshold, the receiver can no longer correctly decode the digital data. This results in loss of signal, often heard as muted audio, brief dropouts, or complete silence.

Similarly, in digital television, interference can prevent the receiver from correctly reconstructing the transmitted data. When this occurs, the picture may freeze, become jerky, or pixelate, breaking up into large visible squares. If the interference is severe or persistent, the picture and sound may disappear entirely.

These effects are a result of the "cliff-edge" behaviour of digital systems, where reception appears normal until signal quality drops below a critical level, at which point decoding fails abruptly rather than degrading gradually as in analogue systems.

Routes of entry

6C1 **Recall** that direct pick up in affected devices tends to be independent of a specific frequency within a band although differences may be noticed between different bands.

Recall that direct pickup is especially an issue in the VHF/UHF bands.

Direct pick-up occurs when unwanted RF energy is received directly by electronic equipment rather than through its intended antenna system. This type of interference often does not depend strongly on a specific frequency within a band. Instead, the affected device may respond to a wide range of frequencies across that band, although noticeable differences can still occur between different frequency bands.

Direct pick-up is particularly common at VHF and UHF. At these higher frequencies, the physical dimensions of wiring, circuit tracks, and cables within electronic equipment

can become comparable to a significant fraction of a wavelength, allowing them to behave unintentionally as antennas. As a result, RF energy can be efficiently coupled into the device, leading to interference.

Because of this effect, equipment that is otherwise functioning correctly may suffer from direct pick-up across much of a band, rather than at one precise frequency, with the severity often increasing at VHF and UHF compared to HF.

6C2 **Understand** that some masthead and down lead TV amplifiers are broadband, amplifying a wide range of frequencies, including amateur frequencies.

Understand that this can result in overloading of the amplifier and/or the TV input.

Some masthead amplifiers and down-lead TV amplifiers are designed to be broadband devices. Rather than amplifying a single television channel, they amplify a wide range of frequencies across the VHF and UHF bands. As a result, these amplifiers may also amplify signals outside the broadcast television bands, including amateur radio transmissions.

When a strong amateur radio signal is present, it can be amplified along with the wanted TV signals. Because the amplifier and the television receiver input are designed to handle only a limited signal level, this unwanted amplification can cause overloading. Overload may occur within the amplifier itself or at the input of the television receiver.

When overloading occurs, the amplifier or receiver no longer operates linearly. This can result in interference to television reception, such as picture breakup, loss of channels, or distortion, even though the amateur transmission is on a different frequency. The problem is caused not by reception on the amateur frequency itself, but by the excessive signal level driving the amplifier or receiver beyond its normal operating range.

Filtering and remedial measures

6D1 **Understand** that filters can be fitted in the leads from the power supply to the transmitter to help minimise RF energy entering the mains wiring.

Recall the use of ferrite ring filters for minimising unwanted RF on antenna downleads and mains leads to affected equipment.

Recall and understand the use of high-pass or lowpass filters to reduce the level of HF and VHF amateur transmissions into other electronic equipment.

Understand the use of mains filters to reduce RF, electric motor and thermostat interference to TV, radio and audio systems.

Unwanted RF energy can escape from a transmitting system and be conducted along power leads, antenna downleads, and other wiring, where it may cause interference to nearby electronic equipment. A range of filtering techniques is therefore used to reduce both the radiation and conduction of unwanted RF.

Filters fitted in the power supply leads to a transmitter are used to prevent RF energy from entering the mains wiring. Without such filtering, the mains cable can act as an unintended antenna and radiate RF throughout a building. Mains filters typically use combinations of inductors and capacitors to present a high impedance to RF while allowing mains-frequency power to pass unaffected.

Ferrite ring filters are commonly used to minimise unwanted RF currents on antenna downleads, coaxial cables, and mains leads feeding affected equipment. Passing a cable through a ferrite ring, or fitting clip-on ferrite sleeves, increases the impedance to RF currents without affecting normal operation. This is particularly effective at suppressing common-mode currents that can otherwise cause interference.

High-pass and low-pass filters are used to reduce the level of unwanted amateur transmissions reaching other electronic equipment. A low-pass filter fitted to an HF transmitter output reduces harmonic radiation at higher frequencies, helping to protect VHF and UHF services. Conversely, a high-pass filter fitted to affected equipment can attenuate strong HF signals while allowing higher-frequency signals, such as TV broadcasts, to pass.

Mains filters are also used on domestic equipment to reduce interference caused by electric motors, thermostats, and other switching devices. These filters prevent RF and impulsive noise from being conducted along the mains wiring and entering TV, radio, and audio systems, improving immunity to interference.

6D2 **Understand** the meanings of common mode and differential mode currents and signals.

Understand how a ferrite ring or choke can be used to attenuate common mode signals in twin wires and braid currents on coaxial cables.

In electrical and RF systems, signals and currents can be described as either differential mode or common mode, depending on how they flow with respect to the conductors involved.

A differential mode signal is the intended signal. In this case, equal currents flow in opposite directions in a pair of conductors. For example, in a balanced feeder, the RF current flowing in one conductor is matched by an equal and opposite current in the

other conductor. The electromagnetic fields largely cancel outside the conductors, so little energy is radiated.

A common mode signal, by contrast, consists of currents that flow in the same direction on both conductors with respect to a reference, often ground. In a twin-wire feeder, common-mode currents flow in the same direction on both wires. In a coaxial cable, common-mode current appears as RF current flowing on the outside of the braid, rather than on the inner surface where the intended differential signal flows.

Common-mode currents are generally unwanted, as they can cause feeder radiation, distortion of antenna radiation patterns, and RF interference in nearby equipment.

A ferrite ring or choke is used to attenuate common-mode signals by increasing the impedance to these unwanted currents. When a twin-wire feeder or coaxial cable is passed through a ferrite ring, the ferrite presents a high impedance to currents flowing in the same direction on both conductors. This significantly reduces common-mode currents.

At the same time, the ferrite has little effect on differential mode signals, because the equal and opposite currents produce opposing magnetic fields that largely cancel within the ferrite. As a result, the wanted signal passes with minimal attenuation while unwanted common-mode currents are suppressed.

In this way, ferrite rings and chokes are an effective and widely used method for reducing common-mode interference on both balanced and unbalanced feeders.

6D3 **Recall** how to use a suitable general coverage receiver to check for spurious and harmonic emissions from the station.

A general coverage receiver can be used to check for spurious and harmonic emissions from a transmitting station by monitoring frequencies other than the intended transmit frequency while the transmitter is operating.

To do this, the receiver is placed near the transmitting station and tuned to frequencies that are harmonics or possible spurious outputs of the transmitter. For example, if the transmitter is operating on a frequency *f*, the receiver can be tuned to 2f, 3f, and higher multiples to check for harmonic radiation. The receiver should also be tuned across nearby bands to listen for unexpected signals that may indicate spurious emissions.

While transmitting, the operator listens for signals that are clearly correlated with transmission activity, such as signals that appear only when the transmitter is keyed or modulated. Any unwanted signals heard at harmonic or unrelated frequencies indicate that the transmitter may be producing excessive harmonics or spurious outputs.

To avoid confusing genuine off-air signals with transmitter-generated emissions, the receiver should be used with a small antenna, reduced gain, or an attenuator. This helps ensure that signals heard are due to local radiation rather than distant stations. Switching the transmitter on and off while observing the receiver can help confirm whether the unwanted signals are originating from the station being tested.

This method provides a simple and effective way to verify that the transmitter and associated filtering are operating correctly and that harmonic suppression is adequate.

6D4 **Understand** the use of a dummy load in fault finding.

Recall that the resistor(s) used in a dummy load must be non-reactive and of a suitable power rating.

Recall how to use a dummy load to check if interference is being caused by a radiated signal or leakage into the mains or other wiring.

A dummy load is an artificial load used in place of an antenna during testing and fault finding. It allows a transmitter to be operated without radiating RF energy, making it a valuable tool when investigating interference problems or checking transmitter performance.

A dummy load is designed to present the correct impedance, typically 50 Ω, to the transmitter while safely dissipating the RF power as heat. The resistor or resistors used in a dummy load must be non-reactive, meaning they have negligible inductance and capacitance. If reactive components were present, the load impedance would vary with frequency and give misleading results. The resistors must also have a suitable power rating to safely absorb the transmitter's output power without overheating or failing.

Dummy loads are particularly useful for determining whether interference is being caused by radiated RF or by RF being conducted into mains or other wiring. To perform this check, the transmitter is first operated normally with the antenna connected, and the interference is observed. The antenna is then disconnected and replaced with a dummy load, while keeping the transmitter operating at the same power level.

If the interference disappears when the dummy load is used, this indicates that the problem is caused by radiated signals from the antenna system. If the interference remains, it suggests that RF energy is escaping via mains leads, power supply wiring, microphone leads, or other connected cables, rather than being radiated by the antenna.

In this way, a dummy load allows the operator to isolate the source of interference and determine whether the problem lies with the antenna system or with RF leakage into other wiring.

Station design and antenna placement/general principles

6E1 **Recall** how to interconnect the transmitter, microphone, power supply, SWR meter and band or low pass filters, using appropriate cables, to minimise EMC problems.

To minimise electromagnetic compatibility (EMC) problems, radio equipment must be interconnected correctly using appropriate cables and a sensible physical layout.

The transmitter should be connected to the power supply using short, heavy-gauge DC leads, ideally twisted together to reduce loop area. These leads should be kept as short as practicable and routed away from RF cables. If fitted, DC line filters or ferrite chokes should be placed close to the transmitter to prevent RF from entering the power leads.

The microphone should be connected to the transmitter using a screened cable, with the screen properly bonded to the transmitter chassis. This prevents RF pickup on the microphone lead, which could otherwise cause audio distortion or RF feedback. Excess microphone cable should not be coiled tightly, as this can increase RF coupling.

An SWR meter is inserted in the coaxial feeder between the transmitter and the antenna system, with the transmitter connected to the meter's "TX" or "Input" port and the antenna or load connected to the "Antenna" or "Output" port. The coaxial cables used should be of good quality, correctly terminated, and kept as short as practical.

A band-pass filter or low-pass filter is normally fitted between the transmitter and the SWR meter, or immediately after the transmitter output. This ensures that harmonic and spurious emissions are reduced before they reach the feeder and antenna, minimising the risk of interference to other equipment.

All coaxial cables should have continuous screening, properly fitted connectors, and good grounding to prevent RF leakage. Where necessary, ferrite chokes can be fitted to coaxial cables and other leads to suppress common-mode currents.

By using short, well-screened cables, correct cable routing, proper grounding, and fitting filters close to the transmitter, unwanted RF radiation and conducted interference are minimised, resulting in improved EMC performance.

6E2 **Recall** what constitutes a good RF earth, its purpose and use.

A good RF earth is a low-impedance connection to ground that provides an effective return path for radio-frequency currents. Its purpose is to control unwanted RF currents,

reduce interference, and improve the stable operation of radio equipment. An RF earth is concerned with high-frequency behaviour, not electrical safety, and is therefore different from a mains safety earth.

A good RF earth should have low impedance at RF, which usually means it should be short, wide, and direct. Flat copper strap or braid is preferred over thin round wire, as it has lower inductive reactance at radio frequencies. The earth connection should be as short as possible and bonded securely to the equipment chassis.In practice, a good RF earth may consist of:

- an earth rod driven into the ground,
- a buried radial or mesh system,
- or a connection to an existing ground system, such as structural metalwork, where appropriate.

The effectiveness of an RF earth improves with surface area and contact with the ground, rather than depth alone. The purpose of an RF earth is to:

- provide a reference point for RF circuits,
- reduce common-mode currents on cables and equipment,
- minimise RF feedback and instability,
- and help reduce EMC problems by preventing RF energy from flowing along unintended paths such as microphone leads, power cables, or mains wiring.

RF earths are commonly used with transmitters, antenna tuning units, and unbalanced antennas, particularly at HF, where the earth forms part of the overall antenna system or helps stabilise it.

It is important to note that an RF earth does not replace a mains safety earth. Where both are required, they should be correctly bonded in accordance with electrical safety practice.

6E3 **Understand** that siting a transmitting antenna close to mains wiring, TV or radio antennas and down-leads is a potential problem exacerbated by the use of a loft or indoor transmitting antenna.

Station design and antenna placement/mobile installations

The siting of a transmitting antenna has a significant effect on the likelihood of causing interference. Placing a transmitting antenna close to mains wiring, TV or radio antennas, or their down-leads is a potential problem because these conductors can unintentionally pick up RF energy. Once RF is coupled into this wiring, it may be conducted throughout a building and cause interference to other electronic equipment.

This problem is exacerbated when loft or indoor transmitting antennas are used. In these situations, the antenna is often in very close proximity to domestic wiring, TV aerials, and audio cabling, all of which can act as unintended receiving antennas. The closer the antenna is to these conductors, the stronger the coupling of RF energy, increasing the risk of EMC issues.

In contrast, outdoor antennas that are properly sited and adequately separated from buildings and services are less likely to cause interference. Increased physical separation reduces RF coupling and allows the antenna to radiate energy more efficiently into free space rather than into nearby wiring.

Good station design therefore includes careful antenna placement, ensuring that transmitting antennas are kept as far as practicable from mains wiring, TV and radio antennas, and their down-leads. In mobile installations, similar principles apply: antennas should be mounted externally and away from vehicle wiring looms and electronic systems, with proper bonding and grounding used to minimise RF currents on cables.

By considering antenna siting as part of overall station design, the likelihood of interference is reduced, and the station operates more efficiently and compatibly with other equipment.

6F2 **Recall** that when routing RF cables and mobile radio DC power leads within vehicles they should not be routed in parallel with the vehicle wiring loom and they should not be run near electronic control units.

Recall that radio frequency energy can cause interference to vehicle electronic circuits, including audio systems, navigation systems, remote locking, alarms and engine fuel management systems particularly when operating equipment with an RF output of 10W or more.

When installing radio equipment in a vehicle, RF cables and DC power leads should be routed carefully to minimise the risk of interference. In particular, they should not be run in parallel with the vehicle's wiring loom, as this increases the likelihood of RF energy being coupled into sensitive vehicle circuits. Where cables must cross existing wiring, they should do so at right angles to reduce coupling.

RF cables and power leads should also be kept well away from electronic control units (ECUs). Modern vehicles contain multiple ECUs controlling critical systems such as engine management, braking, and safety features. These units and their associated

wiring are sensitive to RF energy and can be affected if strong RF fields are present nearby.

Radio frequency energy can cause interference to vehicle electronic systems, particularly when operating transmitters with an RF output power of 10 W or more. Systems commonly affected include audio and entertainment systems, navigation equipment, remote locking, alarm systems, and engine fuel management systems. Interference may manifest as noise, malfunction, or unexpected behaviour.

Good mobile installation practice—careful cable routing, physical separation from vehicle electronics, and proper bonding and grounding—helps reduce RF coupling and ensures safe and reliable operation of both the radio equipment and the vehicle's electronic systems.

6F3 **Understand** that mobile antenna location can affect the radiation field strength within the vehicle; e.g. wing or boot mounted antennas are likely to produce higher exposures than roof mounted antennas.

In mobile radio installations, the location of the antenna has a significant effect on the RF radiation field strength within the vehicle. This, in turn, affects both EMC performance and occupant exposure to RF energy.

When an antenna is mounted on the roof of the vehicle, it is positioned above the passenger compartment and close to the centre of the metal bodywork. The vehicle roof acts as an effective ground plane, allowing the antenna to radiate more efficiently away from the vehicle. As a result, RF field strength inside the vehicle is generally lower, and radiation is more evenly distributed.

By contrast, antennas mounted on the wing, boot lid, or bumper are closer to the passenger compartment and further from an ideal ground plane. In these positions, a greater proportion of the RF energy can couple into the vehicle body and interior. This can result in higher RF field strengths inside the vehicle, increasing the likelihood of interference to onboard electronics and higher RF exposure to occupants.

For these reasons, roof-mounted antennas are generally preferred for mobile installations, as they provide better radiation efficiency, more uniform radiation patterns, and reduced RF levels inside the vehicle compared to wing- or boot-mounted antennas.

Section 7 – Operating practices and procedures

Good operating practices and procedures

7A3 **Recall** common international call sign prefixes;

EI (Eire), F (France), I (Italy), JA (Japan), PA (Netherlands), VE (Canada), VK (Australia), W (USA), ZL (New Zealand).

Callsigns prefixes typically consist of a letter or letters followed by number to indicate the country they were issued by. Prefixes are allocated internationally (by the ITU), not invented by countries themselves. Some countries may use regional specific locators in the prefix to add additional information about where the station is located. Also, some countries will use a letter or number to indicate the level of licence an operator holds.

Some common prefixes are:

EI = Republic of Ireland (Eire)

F = France

I = Italy

JA = Japan

PA = Netherlands

VE = Canada

VK = Australia (Vicious Kangaroos)

W = USA (The West)

ZL = New Zealand

7A5 **Recall** that there are awards available for achievements which include: working continents, countries, islands, prefixes, locator squares and that variations may include certain frequency bands or low power.

Recall that amateur radio contests require the exchange of information such as signal report, serial number and location.

Recall that contests often have sections for different bands, power levels and modes.

Many amateur radio societies and clubs offer awards that radio amateurs can achieve. These awards are often based on making contacts with different continents, countries, islands, call sign prefixes, or locator squares. Variations may include restrictions on frequency band, operating mode, or low-power operation.

Amateur radio contests are competitive events that usually take place over a fixed period of time and require the exchange of specific information. This commonly includes a signal report and call sign, and may also include additional information such as a serial number, zone, or location.

Contests often have separate sections or categories for different frequency bands, power levels, and modes of operation. Certain bands, such as the WARC bands and the 60 m band, are not used for contesting.

Band plans

7B1 **Recall** that band plans are produced by the IARU.

Recall that the band plans state that:

- no SSB operation should take place in the 10MHz (30m) band.
- no contests shall be organised in the 5MHz (60m),10MHz (30m), 18MHz (17m) and 24MHz (12m), bands.
- transmissions on satellite frequencies should be avoided for terrestrial contacts.

Note: The 5MHz (60m) band is NOT available to Intermediate Licence holders.

Questions on beacon and satellite frequencies will be limited to the 14MHz (20m) and 144MHz (2m) bands.

A copy of the relevant band plans will be available during the examination but may not be ones in current use.

Reference Booklets containing examination band plans are available on the RSGB web site.

While it is the regulating authority (Ofcom) that decides the frequency spectrum available to amateurs within the UK, the International Amateur Radio Union (IARU) produces voluntary band plans that recommend how amateur bands should be used. Several bands have restrictions on contesting. These are know as the WARC bands after this gentleman's agreement was reached at the World Administrative Radio Conference in 1979. The WARC bands are: 30m, 17m and 12m. The 60m band, which is unavailable for transmission to intermediate licence holders, and which is shared with the Ministry of Defence, also is not permitted for contesting. The 30m band does not have a lot of bandwidth and so is limited to CW and (non-phone) data operation only. Care must also be taken not to transmit on the various space to Earth and Earth to space frequencies for purely terrestrial contacts.

Codes and abbreviations

7E1 **Recall** the meaning and the reason for use of the Q codes: QRM, QRN, QRO, QRP, QRT, QSB, QSL, QSO, QSY, QTH.

Q-codes provide a standardised shorthand for common operating messages, allowing operators to communicate essential information quickly and accurately, even with weak signals or language barriers.

QRM: Man made interference

QRN: Atmospheric (natural) interference

QRO: High Power Transmission / Increase Transmitter Power

QRP: Low Power Transmission / Lower Transmitter Power

QRT: Stop transmitting / Close down

QSB: Signal Fading

QSL: Acknowledge receipt / Confirm reception

QSO: A contact or communication between stations

QSY: Change frequency

QTH: Location of a station

Digital Interfaces

7F2 **Recall** that several types of transmissions can be generated and received with the use of a personal computer and a suitable interface.

Recall minimal distortion can be obtained by careful adjustments between the DAC interface and the transmitter.

Recall other programs running on the PC that is handling the transmitter or receiver audio may cause interference e.g. warning beeps and alerts.

Digital protocols generally require the use of a computer. This is achieved in different ways: using some form of interface unit, or the output of a soundcard along with a serial connection to control the radio. It is important to note that when a soundcard or sound interface is used, that it should be configured to be solely used for radio communication and not for general sound output. Failure to do this could lead to music or sound from a video being transmitted which would breach licence conditions. It is also important that the sound level is set to prevent overmodulation of the signal which could cause interference on adjacent frequencies. Most transceivers include automatic level control (ALC) to limit RF drive, but audio levels should be set so that ALC action is

minimal or absent. Transmit DSP functions should normally be disabled for digital modes to avoid altering the signal waveform and causing distortion.

Satellites

7G1 **Recall** that satellites orbit the Earth at heights above 250km and understand that most amateur satellites are moving in relation to the Earth and will only be above the horizon at certain times.

Amateur radio satellites orbit the Earth at heights above about 250 km. Most amateur satellites are not geostationary and move relative to the Earth's surface, meaning they are only above the horizon for limited periods of time.

As a result, satellites must be tracked in order to communicate with them, and communication is only possible while the satellite is above the visible horizon. Directional and, in some cases, moving antennas are often used to maintain communication as the satellite passes across the sky.

7G2 **Recall** that the up-link and down-link frequencies are generally in different amateur bands and that details are published by amateur organisations.

Recall that the transmitting station must be able to receive both the up-link and down-link signals.

Amateur satellite operation uses separate uplink (Earth-to-space) and downlink (space-to-Earth) frequencies, which are generally in different amateur bands. Common combinations include 2 m and 70 cm, although some satellites may use other bands, such as 10 m, for the downlink. Details of satellite uplink and downlink frequencies are published by amateur radio organisations.

When operating via a satellite, the transmitting station must be able to receive the satellite's downlink while transmitting, so that the operator can monitor their own signal as it is retransmitted by the satellite.

7G3 **Understand** that amateur satellites can only be used when they are above the horizon at both the sending and receiving stations, and that the movement of the satellite will cause frequency variation, known as Doppler shift, on the received signal, which must be allowed for when selecting operating frequencies.

Amateur satellites can only be used when the satellite is above the horizon at both the transmitting station and the receiving station, so that both stations have a clear line-of-sight path to the satellite at the same time. Because the satellite is moving very fast

relative to stations on the Earth, the received signal is subject to Doppler shift: the received frequency is higher as the satellite approaches and lower as it moves away. This Doppler shift must be allowed for when selecting operating frequencies, particularly on VHF and UHF.

7G4 **Understand** that satellites have a very limited power supply, derived from solar panels, and that excessive up-link power may result in wasteful and unfair use of the satellite's power.

Amateur radio satellites are powered by solar panels and therefore have a very limited power supply. Because of this, the satellite receiver and transponder can easily be overloaded by excessively strong uplink signals.

Excessive uplink power can cause distortion and interference to other users and, in some cases, may cause the satellite to reduce gain or shut down its transponder to protect itself. This results in wasteful and unfair use of the satellite's limited power resources.

As a general rule of thumb, the uplink signal should be no stronger than the received downlink signal.

Section 8 – Safety

Electricity

8A1 **Understand** that large or high-voltage capacitors can store dangerous electric charges and must be discharged before working on equipment.

Recall that large value resistors can be used to provide leakage paths for these stored charges.

Large or high-voltage capacitors can store significant electrical charge long after equipment has been switched off and disconnected from the power supply. This stored energy can present a serious hazard, including the risk of electric shock or burns, if the equipment is handled without care.

Before working on equipment containing large capacitors, the stored charge must be safely discharged. This is best achieved by providing a controlled leakage path using a suitably rated high-value resistor connected across the capacitor terminals, allowing the charge to dissipate gradually and safely without causing damage.

8A4 **Recall** that equipment mains fuses may be of a special type, such as quick blow or slow blow to allow for an initial surge of current and that the specified type must be fitted.

Understand that a fuse must be correctly rated for proper protection, and, in the absence of manufacturer's instructions, to select an appropriate fuse.

For mains: current = power/230 where 230 is the nominal mains voltage.

Mains fuses may be of different types, such as fast-blow or slow-blow, and the specified type must always be fitted. Slow-blow fuses are used where normal inrush currents occur at switch-on, while fast-blow fuses are used to protect sensitive electronic components.

A fuse must be correctly rated to provide proper protection. If manufacturer's instructions are not available, the expected operating current can be calculated using I=PV, where the nominal UK mains voltage is 230 V. The fuse selected should be the next standard rating above the normal operating current. For example, a device consuming 460 W will draw approximately 2 A. In a UK mains plug, the most appropriate fuse would therefore be a 3 A fuse. Equipment may also contain internal fuses with lower current ratings. It is important that replacement fuses match the correct current rating, physical size, and type.

8A6 **Understand** that working on live equipment must only be done if it is not practicable to do otherwise and if the risks and appropriate precautions are fully understood.

Working on live equipment is inherently dangerous and must only be carried out when it is not practicable to do otherwise, and when the risks and appropriate precautions are fully understood. Even equipment powered from low-voltage supplies may contain dangerously high internal voltages, and stored energy, which can present a serious hazard.

Live working carries risks including electric shock, electrocution, burns, fire, or explosion. An electric shock may also cause involuntary muscular contraction, leading to secondary injury such as falling or contact with other live parts.

Where live working is unavoidable, sensible precautions must be taken. These include carrying out a risk assessment and planning the work in advance, using an RCD or RCBO for additional protection, using insulated tools and suitable protective equipment, ensuring that help is available nearby, and providing a clearly accessible master switch so that power can be quickly isolated in an emergency.

8A8 **Understand** that vehicle batteries are a source of very high currents which can start a fire and that battery contents are corrosive.

Understand that explosive hydrogen gas can be given off when charging batteries and that ample ventilation is required.

Vehicle batteries store a large amount of energy and are capable of supplying very high currents. If short-circuited or otherwise misused, these high currents can cause severe heating, fire, or damage to equipment. Many vehicle batteries contain sulphuric acid, which is highly corrosive and can cause injury if spilled or leaked. During charging, batteries may give off hydrogen gas, which is highly flammable. For this reason, batteries must be charged in a well-ventilated area to prevent the build-up of explosive gas mixtures.

8B2 **Understand** that screwdrivers, drills, saws and files must be handled with care.

Understand that fingers should always be behind the blade of hand tools.

Hand tools such as screwdrivers, drills, saws and files must be handled with care to reduce the risk of injury. Tools should be used only for their intended purpose and in a controlled manner.

When using hand tools with cutting edges or blades, fingers must always be kept behind the blade or cutting edge so that if the tool slips, injury to the hand is avoided.

When drilling metal, sharp swarf may be produced and can be ejected at speed, so eye protection should be worn and swarf should be removed using a brush or vacuum, never by blowing.

8B3 **Understand** that any items being drilled, sawn or filed must be securely held in a vice or similar device to prevent them slipping or rotating.

Any items being drilled, sawn, or filed must be securely held in a vice or other suitable holding device to prevent them slipping or rotating, which could cause injury.

When using rotating machinery such as drills, gloves must not be worn, as they can become caught in the rotating tool or workpiece and pull the hand into the machinery. Hands should be kept clear of moving parts at all times.

8B4 **Understand** that any locking keys, and/or chuck keys, must be removed before using a power tool such as a drill to prevent the key being ejected at high speed.

Before operating a power tool such as a drill, any locking keys or chuck keys must be removed. If a key is left in place, it can be ejected at high speed when the tool is switched on, presenting a serious risk of injury.

8B5 **Understand** that using a centre punch will help prevent a drill bit slipping.

Using a centre punch to create a small indentation in the workpiece helps prevent a drill bit from slipping when drilling. This allows the drill bit to start accurately and reduces the risk of the drill wandering or causing injury.

8B6 **Understand** the reasons why a bench-mounted pillar drill is safer than a hand-held drill.

A bench-mounted pillar drill is safer than a hand-held drill because the drill bit is held rigidly and vertically, reducing the risk of the drill slipping or wandering. The workpiece can be securely clamped to the table, preventing it from rotating or being pulled from the operator's hands.

Because the drill is fixed in position, both hands can be kept away from the rotating bit, and the operator has greater control over the drilling process. This reduces the likelihood of injury compared with using a hand-held drill.

Working with RF

8D1 **Recall** that at 100W transmit power, especially with higher gain antennas, the EMF compliance distance can be several metres.

Recall that, when mobile, pedestrians might be inside the EMF compliance distance.

Recall that in such situations, especially when stationary, transmission must cease.

At 100 W transmit power the RF field close to an antenna can be strong enough that the safe EMF compliance distance may be several metres, especially when higher-gain antennas concentrate the energy.

When operating from a vehicle pedestrians may unknowingly walk within this compliance distance. If this happens, particularly when the vehicle is stationary, the operator cannot maintain the required safe separation and transmission must cease in order to remain compliant and protect the public.

Lightning

8E1 **Recall** that limited protection of equipment against the build-up of static charge can be obtained from gas discharge arrestors, spark gaps and bleed resistors.

Lightning presents a hazard not only from direct strikes but also from the build-up of static charge in the atmosphere, which can discharge through an antenna system. Limited protection against this static charge can be provided by devices that safely bleed the charge to ground.

Methods include high-value bleed resistors connected across the antenna, spark gaps, and commercial gas discharge arrestors. These devices provide a controlled path for static charge to dissipate while having minimal effect on normal RF operation. However,

they provide only limited protection and are not a guarantee against damage from a direct lightning strike.

Section 9 – Measurements and construction

Measurements

9A1 **Recall** the purpose of a multimeter and understand how to set the meter to the correct range and polarity before connecting to the circuit.

A multimeter is used to measure electrical quantities such as voltage, current and resistance in a circuit.

Before connecting a multimeter to a circuit, the correct function and range must be selected. When using manual ranges, the meter should initially be set to a range higher than the expected value and then reduced to obtain an accurate reading. Selecting a range that is too low may damage the meter.

The correct AC or DC mode must also be chosen, and polarity must be checked before connecting, especially with analogue meters, as reverse polarity may damage the instrument.

9A2 **Understand** that voltmeters have a high internal resistance so that they draw minimal current from the circuit under test.

Understand that ammeters have a low internal resistance so that they minimise the voltage loss to the circuit under test.

Understand that a voltmeter is always connected in parallel with a component or circuit being tested.

Understand that an ammeter is always connected in series with a component or circuit being tested.

A voltmeter is used to measure the potential difference between two points in a circuit. To avoid affecting the circuit being measured, a voltmeter is designed to have a very high internal resistance. Because of this high resistance, it draws only a very small current from the circuit under test. If a voltmeter had a low resistance, it would allow significant current to flow through it, altering the circuit conditions and giving an inaccurate reading.

For this reason, a voltmeter is always connected in parallel with the component or section of the circuit being measured. Connecting it in parallel allows it to measure the voltage across the component without significantly disturbing the circuit operation.

An ammeter, by contrast, is used to measure current flowing through a circuit. To avoid introducing unwanted voltage drops, an ammeter is designed to have a very low internal

resistance. This ensures that inserting the ammeter into the circuit does not significantly reduce the current or alter the circuit's normal operation.

Because an ammeter must measure the current flowing through a component, it is always connected in series with the circuit or component being tested. Connecting it in parallel would effectively create a low-resistance path and could result in excessive current flow or damage.

In summary, voltmeters have high internal resistance and are connected in parallel, while ammeters have low internal resistance and are connected in series, ensuring accurate measurement with minimal disturbance to the circuit.

9A3 **Understand** the advantages and disadvantages of analogue and digital displays and be able to read analogue and digital values.

Here's a clear, balanced explanation that covers advantages, disadvantages, and reading both types of display at the right depth for the syllabus.

Electronic test instruments and radio equipment may use either analogue or digital displays, each with advantages and disadvantages.

An analogue display typically uses a moving pointer across a calibrated scale. One of its main advantages is that it shows changes and trends very clearly. Fluctuations, peaks, and dips can be seen instantly, which makes analogue meters useful for tuning, peaking circuits, or observing varying signals such as SWR or signal strength. The pointer movement provides an intuitive visual indication of rising or falling values.

However, analogue displays can be less precise than digital displays. Reading accuracy depends on correctly interpreting the scale and avoiding parallax error, which occurs if the pointer is viewed from an angle. The resolution is limited by the scale markings and the observer's ability to judge intermediate positions.

A digital display presents measurements as numerical values. Its main advantage is accuracy and precision, often showing values to several decimal places. Digital displays eliminate parallax error and are generally easier to read for exact measurements. They are particularly useful when precise voltage, current, or frequency measurements are required.

The disadvantage of digital displays is that they may be less effective at showing trends. Rapidly changing values can appear unstable or jumpy, and it may be harder to see gradual changes compared with the smooth movement of an analogue pointer.

To read an analogue meter, the user must:

- Select the correct range,
- Read the appropriate scale,
- Note the full-scale value,
- And interpret the pointer position proportionally.

To read a digital display, the user simply notes the numerical value shown, ensuring that the correct measurement range and units are selected.

In summary, analogue displays are often better for observing trends and adjustments, while digital displays provide greater accuracy and ease of reading precise values.

9A5 **Understand** the use of voltmeters and ammeters to determine the power applied to a circuit.

The power applied to a circuit can be determined by measuring the voltage across the load and the current through it, and then using the appropriate power formula.

Electrical power is given by:

$$P = V \times I$$

where:

- P is power in watts (W),
- V is voltage in volts (V),
- I is current in amperes (A).

To measure this in practice:

- A voltmeter is connected in parallel with the component or load to measure the potential difference across it.
- An ammeter is connected in series with the component to measure the current flowing through it.

Because voltmeters have high internal resistance, they draw minimal current and do not significantly affect the voltage being measured. Ammeters have low internal resistance, so they introduce minimal voltage drop into the circuit.

Once the voltage and current readings are obtained, the power can be calculated by multiplying them together.

For example, if a circuit has:

- 12 V across a load,
- 2 A flowing through it,

then:

$$P = 12 \times 2 = 24W$$

In purely resistive DC circuits, this gives the true power dissipated. In AC circuits, the same principle applies, but care must be taken to consider RMS values and power factor where relevant.

Decibels

9B1 **Recall** that decibels are a power ratio.

Recall that a power gain of 3 dB equates to doubling the power and 10dB equates to a power increase of times 10.

Calculate the power gain or loss of various dB ratios based on 3 and 10dB and their multiples. This includes examples such as 25W is equivalent to 14dBW.

Recall that dB gains and losses in a system can be added to find the total gain or loss in the system.

Recall the meaning of:

- dBW (comparison with 1 W)
- dBi (comparison with an isotopic radiator) and
- dBd (comparison with a half wave dipole).

A decibel (dB) is not an absolute unit of power. It is a ratio comparing two power levels.

The formula for power ratio in decibels is:

$$dB = 10log_{10}\left(\frac{P_2}{P_1}\right)$$

However, at Intermediate level it is expected to use the key reference values:

- +3 dB = power doubled
- –3 dB = power halved
- +10 dB = power multiplied by 10
- –10 dB = power divided by 10

Because decibels are logarithmic, gains and losses can be built up using combinations of 3 dB and 10 dB.

Example 1: +13 dB gain

13 dB = 10 dB + 3 dB

- 10 dB → ×10
- 3 dB → ×2

Total gain:

$$10 \times 2 = 20$$

So +13 dB = ×20 power increase

Example 2: –7 dB loss

7 dB = 10 dB – 3 dB

- –10 dB → ÷10
- +3 dB (since 7 = 10 – 3) → ×2

So:

$$\frac{1}{10} \times 2 = 0.2$$

Therefore –7 dB ≈ 0.2 of the original power

One major advantage of using decibels is that gains and losses in a system can simply be added algebraically.

For example:

- Transmitter output: 30 dBm
- Feeder loss: –6 dB
- Antenna gain: +8 dB

Total:

$$30 - 6 + 8 = 32dBm$$

This makes system calculations straightforward.

dBW is an absolute power level referenced to 1 watt.

$$dBW = 10log_{10}(P\ in\ Watts)$$

Examples:

- 1 W = 0 dBW
- 10 W = 10 dBW
- 100 W = 20 dBW

Example:

Convert 25 W to dBW:

25 W = 10 W × 2.5

10 W = 10 dBW

2.5 ≈ 4 dB

So:

$$25W \approx 14dBw$$

dBi expresses antenna gain relative to an isotropic radiator, which is a theoretical antenna that radiates equally in all directions.

- An isotropic radiator has 0 dBi.
- All real antennas have gain values referenced to this.

dBd expresses antenna gain relative to a half-wave dipole.

A half-wave dipole has 2.15dBi

Therefore:

$$dBi = dBd + 2.15$$

Example:

$$6 + 2.15 = 8.15dBi$$

Components

9C1 **Recall** the resistor colour code, colours 0 to 9 with gold as multiplier.

Recall silver (10%) and gold (5%) as tolerance bands.

Identify the value of a resistor between 1Ω and 9MΩ from the E12 series.

Recall how to read both 4 band and 5 band resistors.

Recall how to read components with a numeric marking of the format 4R7, 3k3 or for capacitors, 103.

Note: The resistor colour code will be provided and actual encoding or decoding of colours will be either 4 band or 5 band resistors.

Candidates are not expected to know the values of the E12 series.

Resistors are marked either with coloured bands or with printed numeric codes. The colour code represents numbers, a multiplier, and a tolerance.

The colours represent digits from 0 to 9 in the standard order:

- Black 0
- Brown 1
- Red 2
- Orange 3
- Yellow 4
- Green 5
- Blue 6
- Violet 7
- Grey 8
- White 9

The multiplier band tells you how many zeros to add:

- Same colours as above for $\times 10^0$ to $\times 10^9$
- Gold = ×0.1
- Silver = ×0.01

Tolerance bands

- Gold = ±5%
- Silver = ±10%

Reading a 4-band resistor

1. Band 1 – first digit
2. Band 2 – second digit
3. Band 3 – multiplier
4. Band 4 – tolerance

Example:

Brown – Black – Red – Gold = 10 × 100 = 1kΩ ±5%

Reading a 5-band resistor

1. Band 1 – first digit
2. Band 2 – second digit
3. Band 3 – third digit
4. Band 4 – multiplier
5. Band 5 – tolerance

Example:

Brown – Black – Black – Red – Gold = 100 × 100 = 10 kΩ ±5%

Five-band resistors are commonly used for tighter-tolerance values.

Some resistors use printed codes instead of colour bands.

Decimal notation

- 4R7 = 4.7 Ω
- 3k3 = 3.3 kΩ
- 2M2 = 2.2 MΩ

The letter replaces the decimal point.

Capacitors often use a three-digit code:

- First two digits = value
- Third digit = number of zeros (in picofarads)

Example:

- 103 = 10 × 10^3 pF = 10 nF

Construction

9D1 **Recall** that screening with thin metal sheet is effective in reducing unwanted radiation from equipment and/or between stages within equipment.

Screening is the use of a conductive barrier, typically a thin metal sheet or enclosure, to prevent unwanted radio-frequency energy from either escaping from or entering electronic equipment.

A thin metal screen works because RF signals induce currents in the metal surface. These currents create opposing electromagnetic fields that cancel or greatly reduce the unwanted radiation. As a result, RF energy is reflected or absorbed by the screen rather than radiated further.

Screening is commonly used around complete items of equipment, such as metal cases or enclosures, to prevent interference to or from other devices. It can also be used between stages within equipment, for example between oscillators, amplifiers, and mixers, to prevent unwanted coupling of signals between stages.

For screening to be effective, the metal sheet must be electrically continuous and connected to a good earth or chassis ground. Gaps, poor joints, or floating screens can significantly reduce its effectiveness.

Thin metal sheet is usually sufficient because RF currents flow mainly on the surface of conductors (the skin effect), so large thickness is not required to achieve good screening at radio frequencies.

Soldering

9E1 **Understand** that soldering is a method of joining metal wires and components using solder and a hot soldering iron.

Soldering is a method of permanently joining metal wires and electronic components by melting a filler metal called solder using a hot soldering iron.

During soldering, the soldering iron heats both the component lead and the copper pad or wire being joined. When they are hot enough, the solder melts and flows over the joint. As it cools, the solder solidifies to form a strong mechanical connection and a good electrical connection between the metals.

The solder itself does not act as a glue. Instead, it bonds to clean metal surfaces by wetting them. For this reason, the parts being soldered must be clean and heated adequately for a reliable joint to be formed.

In electronics, soldering is used to:

- Attach components to circuit boards
- Join wires together
- Make reliable, low-resistance electrical connections

A correctly soldered joint should be smooth and shiny, indicating good contact and proper heating.

9E2 **Recall** that solder is a low melting point alloy and that many solders contain a flux to help the solder to flow and to prevent a layer of oxide forming on the surfaces to be joined.

Solder is a low melting point metal alloy that is used to join metal wires and electronic components without damaging them with excessive heat. Because it melts at a much lower temperature than the metals being joined, it allows strong electrical and mechanical connections to be made safely.

Most electronic solders contain a flux core. The flux has removes and prevents oxides forming on the metal surfaces while they are being heated and it helps the molten solder to flow evenly over the joint and bond properly to the metals.

Metal surfaces naturally form oxide layers when exposed to air, and these oxides prevent solder from sticking. When heated, the flux becomes active and cleans the surfaces, allowing the solder to wet the metals and form a good joint.

Without flux, solder would bead up rather than flow, resulting in a poor-quality joint with high electrical resistance.

9E3 **Recall** that some metals are easier to solder than others.

Some metals are easier to solder than others because solder will only bond well to metals that it can readily wet and form a good surface bond with.

Metals such as copper, tin, and brass are easy to solder because solder flows readily over their surfaces once any oxide layer has been removed by the flux. For this reason, copper is widely used for wires and printed circuit board tracks.

Other metals, such as aluminium and stainless steel, are difficult to solder because they form strong, stable oxide layers very quickly. These oxides prevent solder from wetting the surface, even when flux is used. Special solders, fluxes, or techniques are required to solder these metals successfully.

As a result, electronic components and conductors are usually made from metals that solder easily, ensuring reliable electrical and mechanical joints.

9E4 **Understand** that the tip of the soldering iron has to be cleaned to help remove any oxide and then tinned to prevent the oxide re-forming and to improve the conduction of heat to the joint.

Recall the reason for tinning wires prior to soldering.

The tip of a soldering iron must be kept clean and properly tinned to ensure good soldering results.

During use, the iron tip can become oxidised, which reduces its ability to transfer heat. Cleaning the tip, usually using a damp sponge or brass wool, removes this oxide layer. Once clean, the tip is tinned by applying a small amount of molten solder. The solder coating prevents the oxide layer from quickly reforming and also improves thermal conduction from the tip to the joint, allowing the joint to heat evenly and efficiently.

Tinning wires before soldering means coating the bare wire with a thin layer of solder. This has several advantages. It prevents the wire from oxidising, makes it easier for the solder to flow when the joint is made, and ensures that the wire and the joint heat evenly. Tinned wires also bond more quickly and reliably to pads or terminals, reducing the risk of poor or dry joints.